UPS

SPECIFICATIONS

MODEL	600VA	1000VA
INPUT		
Input voltage	**110V:** 110/120VAC ; **220V:** 220/230/240VAC	
Input voltage range	**110V:** 85~150VAC ; **220V:** 145~290VAC	
Frequency range	45~65Hz	
OUTPUT		
Output voltage	**110V:** 110/120VAC ; **220V:** 220/230/240VAC	
Output voltage range	**110V:** 102-132VAC ; **220V:** 200~255VAC	
Output frequency	60±0.5Hz or 50±0.5Hz (Auto sensing)	
Output wave form	PWM (Batt. mode)	
Transfer time	Typical 2-6ms,10ms max	
BATTERY		
Charging period	4-6 hours recover to 90% capacity	
Battery rating	12V /7Ah x 1	12V /9Ah x 1
PROTECTION		
Full protection	Low voltage & overload & short circuit protection	
ENVIRONMENT		
Environment of performance	Temperature 0℃~40℃, Humidity 20%~90%	
Noise level	Less than 40dB	

TEST THE UPS

To test the UPS on battery mode, cut off the utility and UPS observes "backup indicator" lights, then your PC can continue working normally.

1. Self-testing while switching on

Push the switch for 3 seconds, the red/green led bright(the LCD display input & output voltage). then the UPS will be ready for operation.

2. Silence Function

In Battery Mode, shortly press the switch will enable or disable the buzzer. But when UPS is low battery or overloaded, the buzzer can not be silenced.

3. Autorun

In DC mode,UPS discharges till battery run out and cut off,UPS autorun when AC recover.

4. Overload protection

When UPS is overloaded on operation, it will cut off the output automatically if it is not solved by the user in time.

5. Low battery shut off

When the battery is about to be exhausted, UPS will shut down automatically to protect battery's life.

6. Switching off

1) AC Normal

UPS will cut off the output and goes to AC standby mode by pressing the switch for 3 seconds.

2) Backup

Press the switch for 3 seconds, the UPS will be turned off after a long beep.

TROUBLE SHOOTING

The trouble shooting chart covers most of the difficulties that you may encounter under normal working conditions. If the UPS fails to operate properly, please review the following steps before calling the service center.

1. Is the UPS plugged into a correct working outlet?
2. Is the line voltage within the rating specified?
3. Is the fuse or breaker / circuit protector on back panel open?

Please submit the following information when you call for service.

1. Model No. & Serial No.
2. Date of problem.
3. Full description of problem.

TROUBLE SHOOTING CHART

SYMPTOMS	POSSIBLE CAUSES	ACTIONS TO TAKE
UPS can not be turned ON	UPS is not connecting to AC and overloaded	Please connect to AC and reduce the load
	The input fuse is burnt or breaker is off	Replace the fuse or reset the breaker, remove some load and check if the load is short-circuit or faulty
	AC Input voltage is too low	Please check the AC Input voltage
	The UPS is failure	Please send to the agency to repair
The buzzer beeps every 8 seconds	UPS suddenly turns to battery mode in spite of utility line present	Save the data promptly and shut down the operating system
The buzzer beeps every 1 second	Back-up time less than 1 minute	Close the system and recharge again
Back-up time less than specified	Overloaded	Please reduce the load
	Battery is not fully charged	Recharge the battery for at-least 12 hours and retest the backup time
	Charging unit fault	Please send to the agency to repair

GUARANTEE CERTIFICATE **Serial No.:** _____

Customer's Name: Contact Person:

Address: Telephone No.:

Product/Model: Post Code: Fax No.:

Date of purchase: Expire Date:

Dealer Signature: Customer Signature:

UPS

THIS MANUAL CONTAINS IMPORTANT SAFETY INSTRUCTIONS. KEEP THIS MANUAL HANDY FOR FUTURE REFERENCE.

INSTALLATION AND OPERATION

Before installation, please read and understand the following instructions:
Inspect the following items inside box
※User's Manual
※UPS
※Mains Cord

UNPACKING AND INSPECTION

Examine the packing carton for damage. Notify your dealer immediately if damage is observed. Store the packing in a safe place for possible future trans-shipment of the UPS.

PLACE THE UPS

Position the UPS on a sturdy, dry surface in a well-ventilated area away from direct sources of heat. Leave at least 100 mm clearance all around the UPS to provide adequate ventilation.

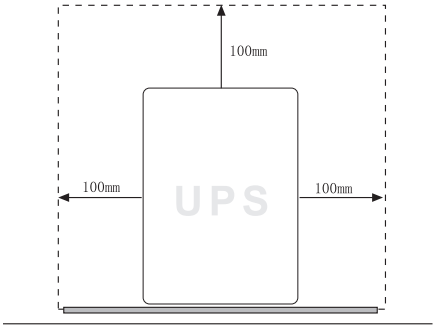

The UPS is intended for indoor use only. Although your UPS is very rugged, its internal components are not sealed from the environment. Kindly note the following.
※Avoid direct sunlight.
※Avoid excessive heat.
※Avoid excessive humidity or liquids.
※Avoid excessive dust.

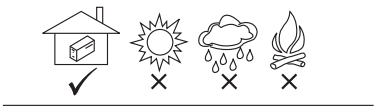

CONNECT UPS TO POWER

1 .With the UPS unit off and unplugged, connect the computer, monitor, and any extemally powered data storage device (Zip drive,Jazz drive,Tape drive)etc. Into the battey power supplied outiets.DO NOT plug a laser printer, copier, space heater, vacuum, paper shredder or other large electrical device into the battery power supplied outlets. The power demands of these devices will overload and possibly damage the unit.

2. Plug the UPS into a 2 pole, 3 wire grounded receptacle (wall outlet). Make sure the wall branch outlet is protected by a fuse or circuit breaker and does not service equipment with large electrical demands(e.g.air conditioner,refrigerator,copier,etc, Avoid using extension cords.)

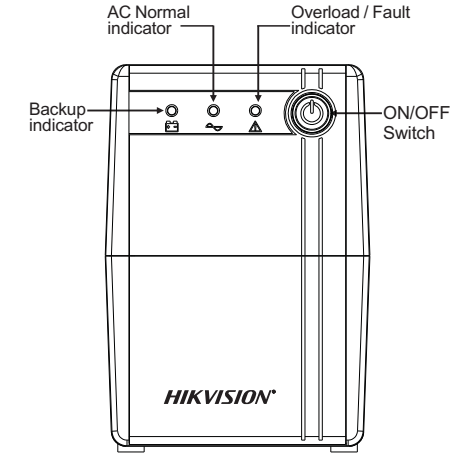

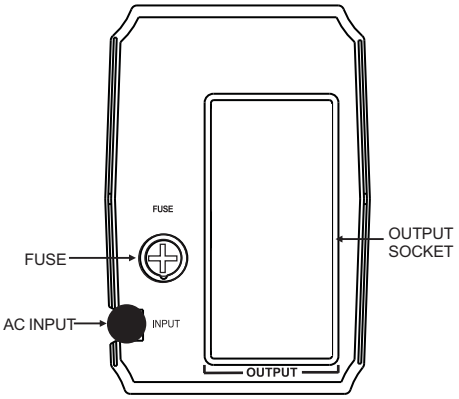

Safety Notice
The product contains voltages, which are potentially hazardous. Qualified service personnel should perform all repairs.
Do not try to open the cover and to service the system yourself, no user serviceable parts inside. Refer servicing to qualified service personnel only. The product has its own internal energy source (battery). The output receptacles may be live even when the product is not connected to an AC supply.

Warning
In case of fire risky, please change the fuse with the same kind and same rate or reset the breaker. The product is intended for indoor use only. Kindly note to avoid excessive heat, dust, humidity or liquids.

BATTERY MAINTENANCE / BATTERY CHARGING

AFTER SHIPMENT FROM THE FACTORY THE BATTERY NEEDS RECHARGING. IF NOT USED FOR A LONG PERIOD OF TIME, THE BATTERY WILL START SELF-DISCHARGING, WHICH MAY RESULT IN A SHORT SERVICE LIFE OF THE BATTERY OR MAY EVEN CAUSE DAMAGE TO IT DURING WARRANTY PERIOD. CARE SHOULD ALSO BE TAKEN TO AVOID EXCESSIVE TEMPERATURE AROUND THE UPS, WHICH COULD ALSO RESULT IN REDUCING SERVICE LIFE OF THE BATTERY. TO ACHIEVE MAXIMUM SERVICE LIFE FROM THE BATTERY THE ABOVE INSTRUCTIONS SHOULD BE FOLLOWED.

The UPS battery charges whenever the UPS is connected to utility power & is switched ON. It typically requires more than 12 hours to charge fully. Operating runtime is reduced until the battery is fully charged.

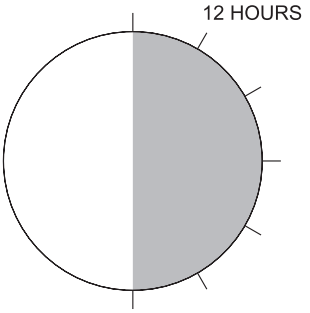

PRODUCT INTRODUCTION

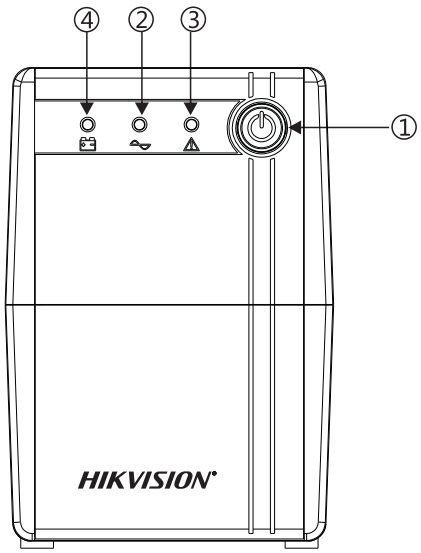

① **ON/OFF switch**

② **AC Normal indicator**
(The Green led continuous bright. The UPS is supplying conditioned utility power to its outlets.)

③ **Overload / Fault indicator**
(The Yellow LED flashes. The buzzer continuous beeping. UPS protects itself at this time. Please move some load or check the UPS.)

④ **Backup indicator**
(The Red led continuous bright. The buzzer beeps every 8 seconds. The battery is powering the UPS outlets.)

UPS

HIKVISION

SPECIFICATIONS

MODEL	2000VA	3000VA
INPUT		
Input voltage	110V: 110/115/120VAC; 220V: 220/230/240VAC	
Input voltage range	110V: 85~145 VAC; 220V: 175~275VAC	
Frequency range	45~65Hz	
OUTPUT		
Output voltage	110V: 110/115/120VAC; 220V: 220/230/240VAC	
Output voltage range	110V: 102~132 VAC; 220V: 200~240VAC	
Output frequency	60±0.5Hz or 50±0.5Hz (Auto sensing)	
Output wave form	PWM (Batt. mode)	
Transfer time	Typical 2-6ms,10ms max	
BATTERY		
Battery rating	12V /9Ah x 2	12V /9Ah x4
Charging period	6-8 hours recover to 90% capacity	
PROTECTION		
Full protection	Low voltage & overload & short circuit protection	
ENVIRONMENT		
Environment of performance	Temperature 0℃~40℃, Humidity 20%~90%	
Noise level	Less than 40dB	

TEST THE UPS

To test the UPS on battery mode, cut off the utility and UPS observes "backup indicator" lights, then your PC can continue working normally.

1. Self-testing while switching on

Push the switch for 3 seconds, (the LCD displayinput & output voltage). then the UPS will be ready for operation.

2. Silence Function

In Battery Mode, shortly press the switch will enable or disable the buzzer. But when UPS is low battery or overloaded, the buzzer can not be silenced.

3. Autorun

In DC mode, UPS discharges till battery run out and cut off, UPS autorun when AC recover.

4. Overload protection

When UPS is overloaded on operation, it will cut off the output automatically if it is not solved by the user in time.

5. Low battery shut off

When the battery is about to be exhausted, UPS will shut down automatically to protect battery's life.

6. Switching off

1) AC Normal

UPS will cut off the output and goes to AC standby mode by pressing the switch for 3 seconds.

2) Backup

Press the switch for 3 seconds, the UPS will be turned off after a long beep.

TROUBLE SHOOTING

The trouble shooting chart covers most of the difficulties that you may encounter under normal working conditions. If the UPS fails to operate properly, please review the following steps before calling the service center.

1. Is the UPS plugged into a correct working outlet?
2. Is the line voltage within the rating specified?
3. Is the fuse or breaker / ciruit protector on back panel open?

Please submit the following information when you call for service.

1. Model No. & Serial No.
2. Date of problem.
3. Full description of problem.

TROUBLE SHOOTING CHART

SYMPTOMS	POSSIBLE CAUSES	ACTIONS TO TAKE
UPS can not be turned ON	UPS is not connecting to AC and overloaded	Please connect to AC and reduce the load
	The input fuse is burnt or breaker is off	Replace the fuse or reset the breaker, remove some load and check if the load is short-circuit or faulty
	AC Input voltage is too low	Please check the AC Input voltage
	The UPS is failure	Please send to the agency to repair
The buzzer beeps every 8 seconds	UPS suddenly turns to battery mode in spite of utility line present	Save the data promptly and shut down the operating system
The buzzer beeps every 1 second	Back-up time less than 1 minute	Close the system and recharge again
Back-up time less than specified	Overloaded	Please reduce the load
	Battery is not fully charged	Recharge the battery for at-least 12 hours and retest the backup time
	Charging unit fault	Please send to the agency to repair

GUARANTEE CERTIFICATE Serial No.: _____

Customer's Name: Contact Person:

Address: Telephone No.:

Product/Model: Post Code: Fax No.:

Date of purchase: Expire Date:

Dealer Signature: Customer Signature:

COMMUNICATION SOFTWARE DOWNLOAD

Communication software download address:
https://www.hikvision.com/en/support/download/software/ups-software/

UPS

THIS MANUAL CONTAINS IMPORTANT SAFETY INSTRUCTIONS. KEEP THIS MANUAL HANDY FOR FUTURE REFERENCE.

INSTALLATION AND OPERATION

Before installation, please read and understand the following instructions:
Inspect the following items inside box
※User's Manual
※UPS
※Mains Cord

UNPACKING AND INSPECTION

Examine the packing carton for damage. Notify your dealer immediately if damage is observed. Store the packing in a safe place for possible future trans-shipment of the UPS.

PLACE THE UPS

Position the UPS on a sturdy, dry surface in a well-ventilated area away from direct sources of heat. Leave at least 100 mm clearance all around the UPS to provide adequate ventilation.

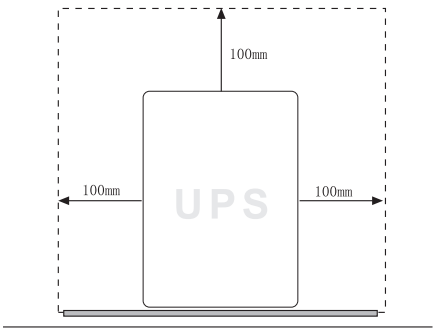

The UPS is intended for indoor use only. Although your UPS is very rugged, its internal components are not sealed from the environment. Kindly note the following.
※Avoid direct sunlight.
※Avoid excessive heat.
※Avoid excessive humidity or liquids.
※Avoid excessive dust.

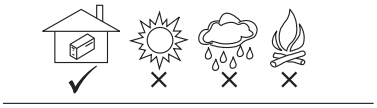

CONNECT UPS TO POWER

1 .With the UPS unit off and unplugged, connect the computer, monitor, and any extemally powered data storage device (Zip drive, Jazz drive, Tape drive)etc. Into the battey power supplied outiets. DO NOT plug a laser printer, copier, space heater, vacuum, paper shredder or other large electrical device into the battery power supplied outlets. The power demands of these devices will overload and possibly damage the unit.

2. Plug the UPS into a 2 pole, 3 wire grounded receptacle (wall outlet). Make sure the wall branch outlet is protected by a fuse or circuit breaker and does not service equipment with large electrical demands (e.g.air conditioner,refrigerator, copier, etc , Avoid using extension cords.)

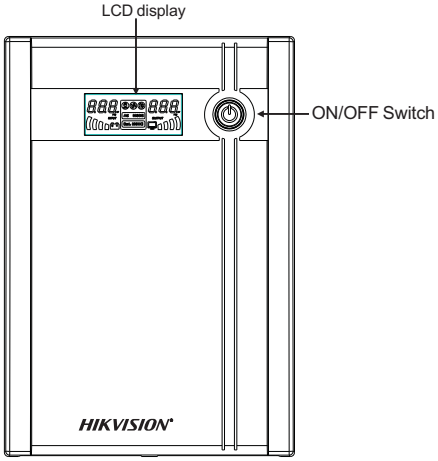

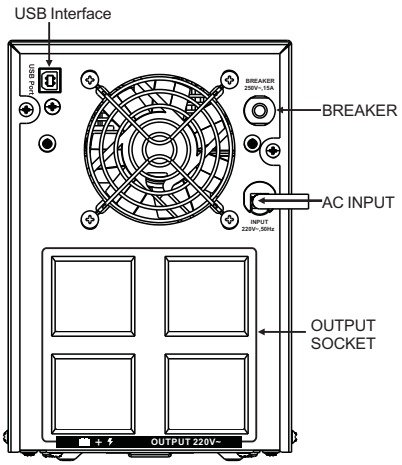

Safety Notice
The product contains voltages, which are potentially hazardous. Qualified service personnel should perform all repairs.
Do not try to open the cover and to service the system yourself, no user serviceable parts inside. Refer servicing to qualified service personnel only. The product has its own internal energy source (battery). The output receptacles may be live even when the product is not connected to an AC supply.

Warning
In case of fire risky, please change the fuse with the same kind and same rate or reset the breaker. The product is intended for indoor use only. Kindly note to avoid excessive heat, dust, humidity or liquids.

BATTERY MAINTENANCE / BATTERY CHARGING

AFTER SHIPMENT FROM THE FACTORY THE BATTERY NEEDS RECHARGING. IF NOT USED FOR A LONG PERIOD OF TIME, THE BATTERY WILL START SELF-DISCHARGING, WHICH MAY RESULT IN A SHORT SERVICE LIFE OF THE BATTERY OR MAY EVEN CAUSE DAMAGE TO IT DURING WARRANTY PERIOD. CARE SHOULD ALSO BE TAKEN TO AVOID EXCESSIVE TEMPERATURE AROUND THE UPS, WHICH COULD ALSO RESULT IN REDUCING SERVICE LIFE OF THE BATTERY. TO ACHIEVE MAXIMUM SERVICE LIFE FROM THE BATTERY THE ABOVE INSTRUCTIONS SHOULD BE FOLLOWED.

The UPS battery charges whenever the UPS is connected to utility power & is switched ON. It typically requires more than 12 hours to charge fully. Operating runtime is reduced until the battery is fully charged.

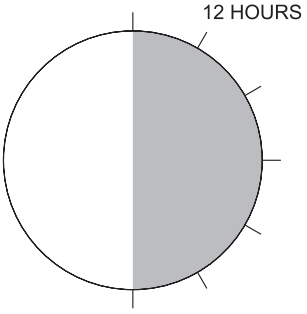

LCD Display

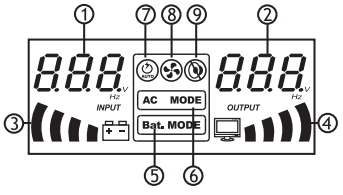

① AC Input Voltage
② Output Voltage
③ Battery Capacity
④ Load Level
⑤ UPS is working in battery mode
⑥ UPS is working in AC mode
⑦ UPS can turn on automaticly
⑧ Fan is working(Some models without fan do not indicate)
⑨ Buzzer is forbided, no sounding, but while over-load and low battery,UPS still with sound indication.(Models with lock button without this indication.)

1) When UPS is under charging
When battery is not fully charged, battery capacity indicator with circle increasing percentage pattern, it shows battery is charging.
When battery is full of charge, battery capacity indicator shows 100% percentage pattern.
2) When UPS in AC Mode
① AC input voltage
② UPS output voltage
③ The percentage of battery capacity, with the same indication of UPS charging situation.
④ The percentage of load level, when it is overload to 100%, indicator continued flickers with long beeps.
Note: In this mode, shortly press on the control button, UPS will indicate output frequency for 4 seconds.(This function just can be used in UPS with touch button.)
3) When UPS in Battery Mode
① No AC input indication
② Battery output voltage in battery mode
③ The percentage of battery, if UPS is low battery,indicator continued flickers and the buzzer beeps every second.
④ The percentage of load, if UPS over load, indicator continued flickers with long beeps.