HIKVISION

DS-KD-K12 Series Nametag Module

Quick Start Guide

UD35732B

For more details about the installation, please refer to the ***User Manual***.

Quick Guide

1 Terminals and Wiring

1.1 Terminals of RS-485 Module-Connecting Interface

1.2 Wiring with Module Door Station (Main Unit) and Indoor Station

2 Installation

2.1 Three-Module Flush Mounting

2.2 Three-Module Surface Mounting

3 Configuration

Configure the module via the web client of the door station.

Appearance and Interface

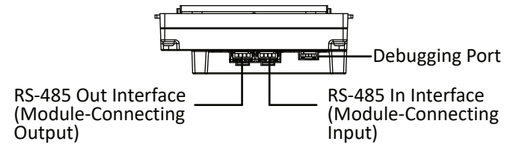

1. The pictures here are for reference only.
2. The nametag can be replaced.
3. RS-485 interfaces are for module-connecting.
4. The debugging port is for debugging use only.
5. The device can be used for cascading. To avoid the risk of overload in the preceding power supply, it is necessary to use it in combination according to the output limit of the main unit.

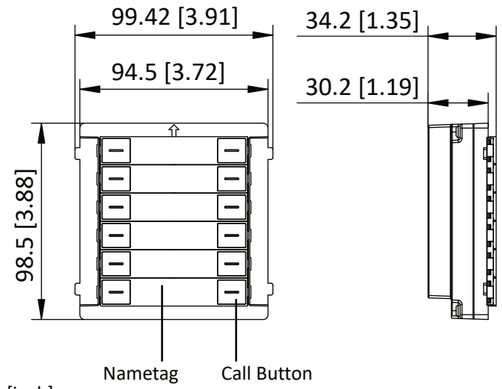

Unit: mm [inch]

1 Terminals and Wiring

RS-485 Module-Connecting Interfaces

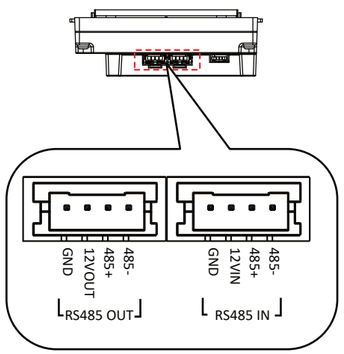

Wiring with Module Door Station (Main Unit) and Indoor Station

The nametag module can connect to module door station (main unit) and two-wire module door station via RS-485 module-connecting interfaces. Here takes two-wire main unit as an example (When connecting to module door station, there will not be distributors). After connecting with the door station and setting the call button of the module, you can press the call button of the sub module to call linked indoor station. For more information about setting call buttons, please refer to chapter 3.

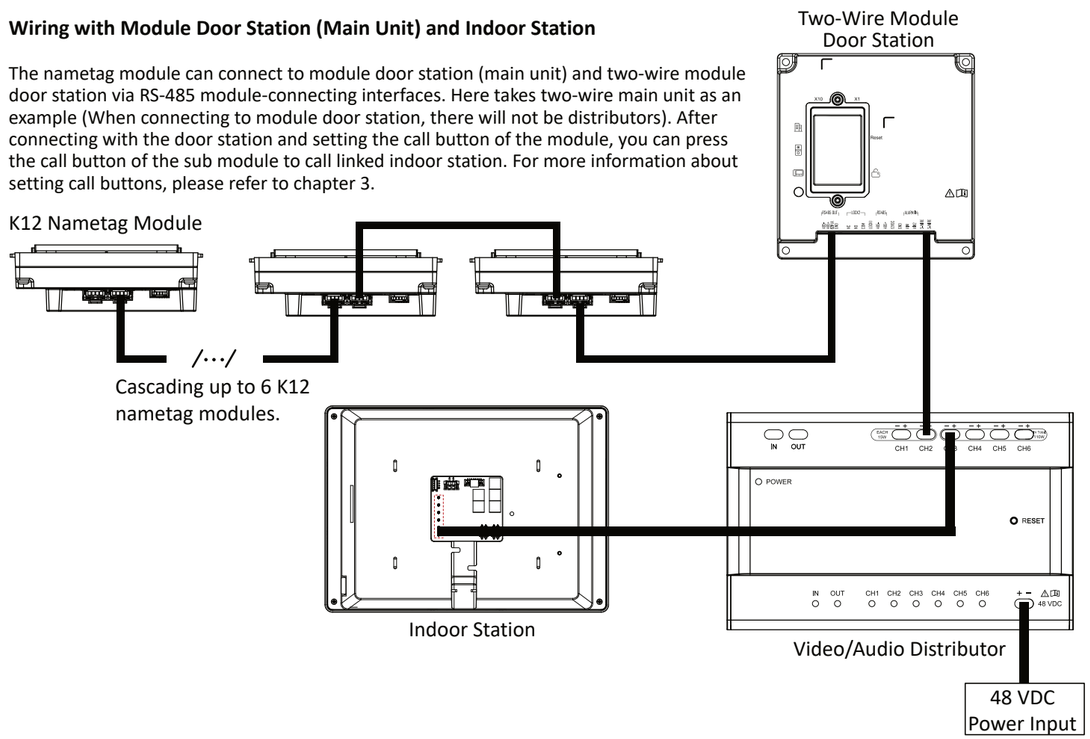

If a power adapter is provided in the device package, use the provided adapter only. If no power adapter is provided, ensure the power adapter or other power supply complies with Limited Power Source. Refer to the product label for the power supply output parameters.

Если адаптер питания входит в комплект поставки устройства, используйте только прилагаемый адаптер. Если адаптер питания не входит в комплект поставки, убедитесь, что используемый вами адаптер питания или источник питания соответствует требованиям к ограниченной мощности. Выходные параметры источника питания указаны на его паспортной табличке.

Amennyiben a készülék csomagja tartalmaz hálózati adaptert, kizárólag a mellékelt adaptert használja. Ha a csomag nem tartalmaz hálózati adaptert, bizonyosodjon meg, hogy a használt hálózati adapter vagy más tápegységek megfelelnek a korlátozott áramforrásokra vonatkozó előírásoknak. A tápegység teljesítményének paraméterei a termék címkéjén találhatók.

Wenn im Lieferumfang des Geräts ein Netzteil enthalten ist, verwenden Sie nur das mitgelieferte Netzteil. Wenn kein Netzteil mitgeliefert wird, stellen Sie sicher, dass das Netzteil oder eine andere Stromversorgung den Anforderungen an eine Stromquelle mit begrenzter Leistung entspricht. Die Ausgangsparameter des Netzteils sind auf dem Produktaufkleber angegeben.

Utilizzare solo l'alimentatore in dotazione, se incluso nella confezione del dispositivo. Se l'alimentatore non è incluso, accertarsi di utilizzare un modello conforme allo standard sulle fonti di alimentazione limitate. Consultare l'etichetta del prodotto per i parametri dell'uscita di alimentazione.

Pokud je v balení zařízení dodán napájecí adaptér, používejte pouze dodaný adaptér. Pokud není napájecí adaptér dodán, zajistěte, aby napájecí adaptér nebo jiný napájecí zdroj vyhovovaly požadavkům na omezený zdroj napájení. Parametry výstupu napájení viz štítek výrobku.

Ak bolo zariadenie dodané s napájacím adaptérom, použite iba dodaný adaptér. Ak napájací adaptér nie je dodaný, uistite sa, že napájací adaptér alebo iný zdroj napájania vyhovuje obmedzenému zdroju napájania. Parametre výstupu napájacieho zdroja nájdete na štítku produktu.

Si un adaptateur secteur est fourni dans l'emballage de l'appareil, n'utilisez que l'adaptateur fourni. Si aucun adaptateur secteur n'est fourni, assurez-vous que l'adaptateur secteur ou toute autre source d'alimentation est conforme à la source d'alimentation limitée. Reportez-vous à l'étiquette du produit pour connaître les paramètres de sortie de l'alimentation.

Jeżeli w pakiecie z urządzeniem dostarczany jest zasilacz, należy używać wyłącznie tego zasilacza. Jeżeli zasilacz nie jest dostarczany w pakiecie z urządzeniem, należy używać zasilacza zgodnego z wymaganiami dotyczącymi źródeł zasilania z własnym ograniczeniem (LPS, Limited Power Source). Informacje dotyczące wymaganego zasilania podano na etykiecie produktu.

Als een voedingsadapter in de verpakking van het apparaat is geleverd, mag u alleen deze adapter gebruiken. Als er geen voedingsadapter is meegeleverd, moet u ervoor zorgen dat de voedingsadapter of een andere stroombron voldoet aan de Beperkte voedingsbron. Raadpleeg het productlabel voor de parameters voor de stroomuitvoer.

Se a embalagem do dispositivo incluir um adaptador de alimentação, utilize apenas o adaptador fornecido. Se não for fornecido um adaptador, certifique-se de que o adaptador de alimentação ou qualquer outra fonte de alimentação está em conformidade com a Fonte de Alimentação Limitada. Consulte a etiqueta do produto para obter os parâmetros nominais da fonte de alimentação.

Si el paquete del dispositivo incluye un adaptador de corriente, utilice únicamente el adaptador suministrado. Si no se suministra un adaptador de corriente, asegúrese de que el adaptador de corriente u otra fuente de alimentación que utilice cumple con el límite de la fuente de alimentación. Consulte la etiqueta del producto para conocer los parámetros de salida de la fuente de alimentación.

Dacă dispozitivul se furnizează cu un adaptor de alimentare, utilizați-l numai pe acesta. Dacă nu se furnizează niciun adaptor de alimentare, asigurați-vă că adaptorul sau o altă alimentare electrică este compatibilă cu sursa de alimentare limitată. Pentru parametrii de ieșire ai alimentării electrice, consultați eticheta produsului.

Hvis en strømadapter følger med i enhedens pakke, må du kun bruge den medfølgende adapter. Hvis der ikke medfølger en strømadapter, skal du sikre, at strømadapteren eller en anden strømforsyning overholder LPS (Limited Power Source). Find strømforsyningens udgangsparametre i produktets mærkat.

Cihaz paketinde bir güç adaptörü varsa, sadece verilen adaptörü kullanın. Güç adaptörü verilmediyse, güç adaptörünün veya diğer güç kaynağının Sınırlı Güç Kaynağı ile uyumlu olduğundan emin olun. Güç kaynağı çıkış parametreleri için ürün etiketine bakın.

في حال توفر محول طاقة في عبوة الجهاز، استخدم المحول المرفق فقط. في حال عدم توفر محول طاقة، تأكد من توافق محول الطاقة أو مصدر الطاقة الآخر مع مصدر الطاقة المحدود. راجع ملصق المنتج للاطلاع على معلمات خرج مصدر الطاقة.

Якщо блок живлення входить у комплект поставки, використовуйте тільки наданий блок живлення. Якщо блок живлення не входить у комплект поставки, переконайтеся, що блок живлення або інше джерело живлення відповідає вимогам до джерел живлення обмеженої потужності. Вимоги до вихідних параметрів джерела живлення див. на етикетці виробу.

Jika adaptor daya disediakan dalam kemasan perangkat, hanya gunakan adaptor yang disediakan. Jika adaptor daya tidak disediakan, pastikan adaptor daya atau catu daya lain sesuai dengan Sumber Daya Terbatas. Lihat label produk untuk parameter output catu daya.

ကိရိယာ ထုပ်ပိုးမှုတွင် ပါဝါ အဒက်ပတာ ထည့်သွင်းပါရှိပါက၊ ပေးထားသော အဒက်ပတာကိုသာ အသုံးပြုပါ။ ပါဝါ အဒက်ပတာ ပါရှိခြင်းမရှိပါက၊ ပါဝါရင်းမြစ် ကန့်သတ်မှုနှင့် ကိုက်ညီသော ပါဝါ အဒက်ပတာ သို့မဟုတ် အခြား ပါဝါ ပေးသွင်းမှုများကို သုံးရန် လုပ်ပြုပါ။ ပါဝါပေးသွင်းမှု အထွက် ကန့်သတ်ချက်များအတွက် ထုတ်ကုန်တွင် ရေးသားထားချက်ကို ကိုးကားပါ။

2 Installation

Before You Start

- Make sure all related equipments are power-off during the installation.
- Make sure you have configured the sub module address before installation. Valid sub module address ranges from 1 to 20. The No. should be unique for sub modules that connected to the same door station. The sub module address and corresponding DIP switch status is shown as the figure shown.

  Note: The nametag module supports two-module installation and three-module installation. Here takes three-module installation as an example.

Sub Module No.	DIP Switch 1	DIP Switch 2	DIP Switch 3	DIP Switch 4	DIP Switch 5	DIP Switch 6	DIP Switch 7	DIP Switch 8
Module 1	ON	OFF	OFF	OFF	OFF	OFF	OFF	OFF
Module 2	OFF	ON	OFF	OFF	OFF	OFF	OFF	OFF
Module 3	ON	ON	OFF	OFF	OFF	OFF	OFF	OFF
Module 4	OFF	OFF	ON	OFF	OFF	OFF	OFF	OFF
Module 5	ON	OFF	ON	OFF	OFF	OFF	OFF	OFF
Module 6	OFF	ON	ON	OFF	OFF	OFF	OFF	OFF
Module 7	ON	ON	ON	OFF	OFF	OFF	OFF	OFF
Module 8	OFF	OFF	OFF	ON	OFF	OFF	OFF	OFF

Flush Mounting

1

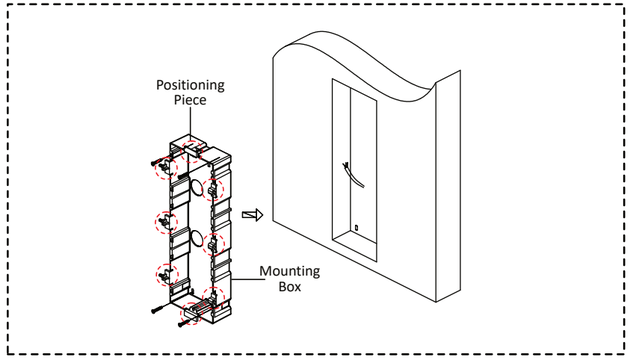

1. (1) Stick the mounting sticker to the wall and cave the installation hole according to the sticker. Pull the cable out.

Note: The suggested depth of the hole is 44.5 mm. The suggested length of the cables left outside is 270 mm.

(2) Stick the mounting sticker to the installation hole and drill 4 holes of 25 mm deep according to the marks on the sticker and insert the expansion sleeves into the screw holes. Fix the mounting box to the installation with 4 expansion bolts.

(3) Remove the positioning piece of the mounting box.

2

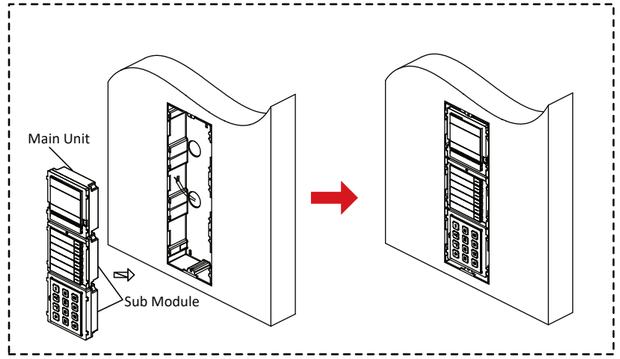

2. Connect cables of the main unit and other modules and insert the modules to the mounting box. Apply silicone sealant on the top and sides of the mounting box. Do not apply silicone sealant on the bottom of the box.

3

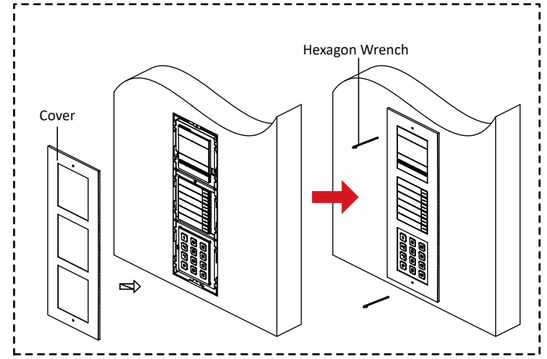

3. Fix the cover with 2 socket head cap screws by using a hexagon wrench.

Surface Mounting

1

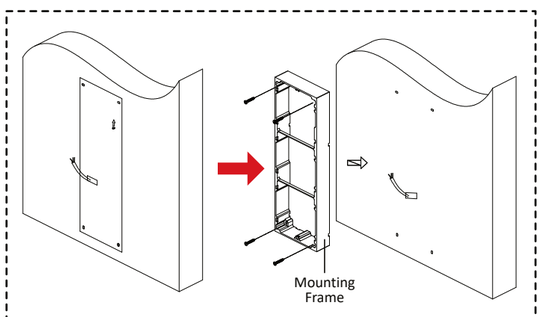

1. (1) Stick the mounting sticker to the wall.

Note: The suggested length of the cables left outside is 270 mm.

(2) Drill 4 holes of 25 mm deep according to the marks on the sticker and insert the expansion sleeves into the screw holes. Remove the mounting sticker and fix the mounting frame to the wall with 4 expansion bolts.

2

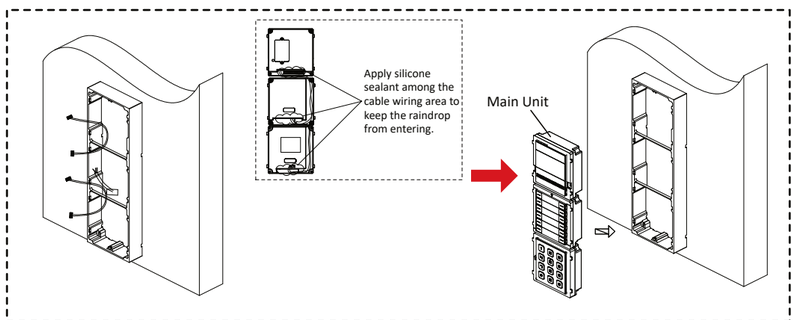

2. Thread the module-connecting line across the thread holes of the frame. Pass the main unit connecting line across the thread hole to the top grid and connect the cables. Insert the modules into the frame after wiring. The main unit must be placed in the top grid.

3

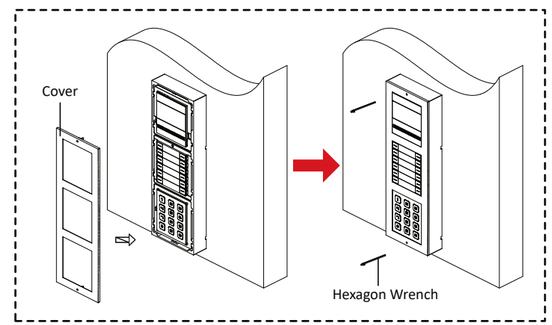

3. Use the hexagon wrench in the package to fix the cover onto the frame.

3 Configuration

Before You Start

Note: After connecting with the door station, the module can call the linked indoor station. You can set relative parameters via the Web client of the door station.

a. Connect nametag module to a door station through module-connecting interface.
b. Wire the indoor station to the distributor and the door station.
Note: For more information about the connecting approach, please refer to chapter 1.
c. Login to the Web client of the door station.

Steps:

After login to the web client of the door station,

1. Click **Configuration** --> **Intercom**--> **Press Button to Call** to enter the configuration page.
2. Select **Sub Module** from the drop-down list.
3. Fill in the **Room No.** of the Indoor Station in the blank of the **Button Settings** column.
4. After configuration, you can press the button on the module to call relative Indoor Station.

About this Document

- This Document includes instructions for using and managing the Product. Pictures, charts, images and all other information hereinafter are for description and explanation only.
- The information contained in the Document is subject to change, without notice, due to firmware updates or other reasons. Please find the latest version of the Document at the Hikvision website (***https://www.hikvision.com***). Unless otherwise agreed, Hangzhou Hikvision Digital Technology Co., Ltd. or its affiliates (hereinafter referred to as "Hikvision") makes no warranties, express or implied.
- Please use the Document with the guidance and assistance of professionals trained in supporting the Product.

About this Product

This product can only enjoy the after-sales service support in the country or region where the purchase is made.

Acknowledgment of Intellectual Property Rights

- Hikvision owns the copyrights and/or patents related to the technology embodied in the Products described in this Document, which may include licenses obtained from third parties.
- Any part of the Document, including text, pictures, graphics, etc., belongs to Hikvision. No part of this Document may be excerpted, copied, translated, or modified in whole or in part by any means without written permission.
- ***HIKVISION*** and other Hikvision's trademarks and logos are the properties of Hikvision in various jurisdictions.
- Other trademarks and logos mentioned are the properties of their respective owners.

LEGAL DISCLAIMER

- TO THE MAXIMUM EXTENT PERMITTED BY APPLICABLE LAW, THIS DOCUMENT AND THE PRODUCT DESCRIBED, WITH ITS HARDWARE, SOFTWARE AND FIRMWARE, ARE PROVIDED "AS IS" AND "WITH ALL FAULTS AND ERRORS". HIKVISION MAKES NO WARRANTIES, EXPRESS OR IMPLIED, INCLUDING WITHOUT LIMITATION, MERCHANTABILITY, SATISFACTORY QUALITY, OR FITNESS FOR A PARTICULAR PURPOSE. THE USE OF THE PRODUCT BY YOU IS AT YOUR OWN RISK. IN NO EVENT WILL HIKVISION BE LIABLE TO YOU FOR ANY SPECIAL, CONSEQUENTIAL, INCIDENTAL, OR INDIRECT DAMAGES, INCLUDING, AMONG OTHERS, DAMAGES FOR LOSS OF BUSINESS PROFITS, BUSINESS INTERRUPTION, OR LOSS OF DATA, CORRUPTION OF SYSTEMS, OR LOSS OF DOCUMENTATION, WHETHER BASED ON BREACH OF CONTRACT, TORT (INCLUDING NEGLIGENCE), PRODUCT LIABILITY, OR OTHERWISE, IN CONNECTION WITH THE USE OF THE PRODUCT, EVEN IF HIKVISION HAS BEEN ADVISED OF THE POSSIBILITY OF SUCH DAMAGES OR LOSS.
- YOU ACKNOWLEDGE THAT THE NATURE OF THE INTERNET PROVIDES FOR INHERENT SECURITY RISKS, AND HIKVISION SHALL NOT TAKE ANY RESPONSIBILITIES FOR ABNORMAL OPERATION, PRIVACY LEAKAGE OR OTHER DAMAGES RESULTING FROM CYBER-ATTACK, HACKER ATTACK, VIRUS INFECTION, OR OTHER INTERNET SECURITY RISKS; HOWEVER, HIKVISION WILL PROVIDE TIMELY TECHNICAL SUPPORT IF REQUIRED.
- YOU AGREE TO USE THIS PRODUCT IN COMPLIANCE WITH ALL APPLICABLE LAWS, AND YOU ARE SOLELY RESPONSIBLE FOR ENSURING THAT YOUR USE CONFORMS TO THE APPLICABLE LAW. ESPECIALLY, YOU ARE RESPONSIBLE, FOR USING THIS PRODUCT IN A MANNER THAT DOES NOT INFRINGE ON THE RIGHTS OF THIRD PARTIES, INCLUDING WITHOUT LIMITATION, RIGHTS OF PUBLICITY, INTELLECTUAL PROPERTY RIGHTS, OR DATA PROTECTION AND OTHER PRIVACY RIGHTS. YOU SHALL NOT USE THIS PRODUCT FOR ANY PROHIBITED END-USES, INCLUDING THE DEVELOPMENT OR PRODUCTION OF WEAPONS OF MASS DESTRUCTION, THE DEVELOPMENT OR PRODUCTION OF CHEMICAL OR BIOLOGICAL WEAPONS, ANY ACTIVITIES IN THE CONTEXT RELATED TO ANY NUCLEAR EXPLOSIVE OR UNSAFE NUCLEAR FUEL-CYCLE, OR IN SUPPORT OF HUMAN RIGHTS ABUSES.
- IN THE EVENT OF ANY CONFLICTS BETWEEN THIS DOCUMENT AND THE APPLICABLE LAW, THE LATTER PREVAILS.

© Hangzhou Hikvision Digital Technology Co., Ltd. All rights reserved.