DS-2DE5425IW-AE(S6)
4 MP 25× Network IR Speed Dome





Hikvision DS-2DE5425IW-AE(S6) 4 MP 25 × Network IR Speed Dome adopts 1/2.8" progressive scan CMOS chip. With the 25 × optical zoom lens, the camera offers more details over expansive areas.

This series of cameras can be widely used for wide ranges of high-definition, such as rivers, roads, railways, airports, squares, parks, scenic spots, and venues, etc.

- 1/2.8" Progressive Scan CMOS
- High quality imaging with 4 MP resolution
- Excellent low-light performance with powered-by-DarkFighter technology
- 25× optical zoom and 16× digital zoom provide close up views over expansive areas
- WDR, HLC, BLC, 3D DNR, defog, regional exposure, regional focus
- Expansive night view with up to 150 m IR distance
- 24 VAC & PoE (802.3at)
- Efficient H.265+/H.265 compression technology

▪ DORI

The DORI (detect, observe, recognize, identify) distance gives the general idea of the camera ability to distinguish persons or objects within its field of view.

It is calculated based on the camera sensor specification and the criteria given by EN 62676-4: 2015.

DORI	Detect	Observe	Recognize	Identify
Definition	25 px/m	63 px/m	125 px/m	250 px/m
Distance (Tele)	2400.0 m (7874.0 ft)	952.4 m (3124.7 ft)	480.0 m (1574.8 ft)	240.0 m (787.4 ft)

▪ Specification

Camera Module	
Image Sensor	1/2.8" Progressive Scan CMOS
Min. Illumination	Color: 0.005 Lux @ (F1.6, AGC ON); B/W: 0.001 Lux @ (F1.6, AGC ON), 0 Lux with IR
Shutter Speed	1 s to 1/30,000 s
Slow Shutter	Yes
Day & Night	IR cut filter
Zoom	25x optional, 16x digital
Max. Resolution	2560 × 1440
Lens	
Focus	Auto, semi-auto, manual
Focal Length	4.8 mm to 120 mm
Zoom Speed	Approx. 3.6 s
FOV	Horizontal field of view: 55° to 2.4° (wide-tele), Vertical field of view: 33° to 1.4° (wide-tele), Diagonal field of view: 61.5° to 2.8° (wide-tele)
Aperture	Max. F1.6
Illuminator	
Supplement Light Type	IR
Supplement Light Range	IR Distance: up to 150 m
PTZ	
Movement Range (Pan)	360°
Movement Range (Tilt)	-15° to 90° (auto flip)
Pan Speed	Pan speed: configurable from 0.1° to 120°/s; preset speed: 120°/s
Tilt Speed	Tilt speed: configurable from 0.1° to 80°/s, preset speed 80°/s
Proportional Zoom	Yes
Presets	300
Patrol Scan	8 patrols, up to 32 presets for each patrol
Pattern Scan	4 pattern scans
Power-off Memory	Yes
Park Action	Preset, pattern scan, patrol scan, auto scan, tilt scan, random scan, frame scan, panorama scan
3D Positioning	Yes
PTZ Status Display	Yes
Preset Freezing	Yes

Scheduled Task	Preset, pattern scan, patrol scan, auto scan, tilt scan, random scan, frame scan, panorama scan, dome reboot, dome adjust, aux output
Video	
Main Stream	50 Hz: 25 fps (2560 × 1440, 1920 × 1080, 1280 × 960, 1280 × 720) 60 Hz: 30 fps (2560 × 1440, 1920 × 1080, 1280 × 960, 1280 × 720)
Sub-Stream	50 Hz: 25 fps (704 × 576, 640 × 480, 352 × 288) 60 Hz: 30 fps (704 × 480, 640 × 480, 352 × 240)
Third Stream	50 Hz: 25 fps (1920 × 1080, 1280 × 960, 1280 × 720, 704 × 576, 640 × 480, 352 × 288) 60 Hz: 30 fps (1920 × 1080, 1280 × 960, 1280 × 720, 704 × 480, 640 × 480, 352 × 240)
Video Compression	Main stream: H.265+/H.265/H.264+/H.264 Sub-stream: H.265/H.264/MJPEG Third stream: H.265/H.264/MJPEG
Video Bit Rate	32 Kbps to 16 Mbps
H.264 Type	Baseline profile/Main profile/High profile
H.265 Type	Main profile
Scalable Video Coding (SVC)	H.264 and H.265 encoding
Region of Interest (ROI)	8 fixed regions for each stream
Audio	
Audio Compression	G.711/G.722.1/G.726/MP2L2/PCM
Audio Bit Rate	64 Kbps (G.711)/16 Kbps (G.722.1)/16 Kbps (G.726)/32-192 Kbps (MP2L2)/32 Kbps (PCM)
Audio Sampling Rate	8 kHz/16 kHz/32 kHz/48 kHz
Environment Noise Filtering	Yes
Network	
Network Storage	NAS (NFS, SMB/CIFS), auto network replenishment (ANR)
Protocols	IPv4/IPv6, HTTP, HTTPS, 802.1x, Qos, FTP, SMTP, UPnP, SNMP, DNS, DDNS, NTP, RTSP, RTCP, RTP, TCP/IP, UDP, IGMP, ICMP, DHCP, PPPoE, Bonjour, ISUP
API	Open Network Video Interface (Version 18.12, Profile S, Profile G, Profile T), ISAPI, SDK, ISUP
Simultaneous Live View	Up to 20 channels
User/Host	Up to 32 users; 3 user levels: administrator, operator, and user
Security	Password protection, complicated password, HTTPS encryption, 802.1X authentication (EAP-TLS, EAP-LEAP, EAP-MD5), watermark, IP address filter, basic and digest authentication for HTTP/HTTPS, control timeout settings, security audit log, TLS 1.2, host authentication (MAC address)
Client	iVMS-4200, HikCentral Pro, Hik-Connect
Web Browser	IE 10-11, Chrome 57+, Firefox 52+, Safari 12+
Image	
Day/Night Switch	Day, Night, Auto, Schedule
Image Enhancement	BLC, HLC, 3D DNR
Wide Dynamic Range (WDR)	120 dB
Defog	Digital Defog
Regional Exposure	Yes
Regional Focus	Yes

Image Settings	Saturation, brightness, contrast, sharpness, gain, and white balance adjustable by client software or web browser
Image Parameters Switch	Yes
Privacy Mask	24 programmable polygon privacy masks, mask color or mosaic configurable
SNR	> 52 dB
Interface	
Ethernet Interface	1 RJ45 10M/100M self-adaptive Ethernet port
On-board Storage	Built-in memory card slot, support microSD/SDHC/SDXC card, up to 256 GB
Alarm	2 inputs, 1 output
Audio	1 input (line in), max. input amplitude: 2-2.4 vpp, input impedance: 1 KΩ ± 10%; 1 output (line out), line level, output impedance: 600 Ω
Reset	Yes
Event	
Basic Event	Motion detection, video tampering alarm, exception, alarm input and output
Smart Event	Face detection, line crossing detection, intrusion detection, region entrance detection, region exiting detection, unattended baggage detection, object removal detection, audio exception detection
Alarm Linkage	Upload to FTP/NAS/memory card, notify surveillance center, send email, trigger alarm output, trigger recording, and PTZ actions (such as preset, patrol scan, pattern scan)
General	
Power	24 VAC, Max. 24 W (including max. 9 W for IR and max. 1.6 W for heater); PoE (802.3at)
Operating Condition	-30 °C to 65 °C (-22 °F to 149 °F). Humidity 90% or less (non-condensing)
Demist	Yes
Material	Metal
Dimensions	Ø 210 mm × 344.7 mm (Ø 8.27" × 13.57")
Weight	Approx. 3.0 kg (6.61 lb.)
Approval	
Protection	IP66 (IEC 60529-2013), TVS 6000V lightning protection, surge protection and voltage transient protection

▪ Available Model

DS-2DE5425IW-AE(S6)

▪ Typical Application

Hikvision products are classified into three levels according to their anti-corrosion performance. Refer to the following description to choose for your using environment.

This model has NO SPECIFIC PROTECTION.

Level	Description
Top-level protection	Hikvision products at this level are equipped for use in areas where professional anti-corrosion protection is a must. Typical application scenarios include coastlines, docks, chemical plants, and

	more.
Moderate protection	Hikvision products at this level are equipped for use in areas with moderate anti-corrosion demands. Typical application scenarios include coastal areas about 2 kilometers (1.24 miles) away from coastlines, as well as areas affected by acid rain.
No specific protection	Hikvision products at this level are equipped for use in areas where no specific anti-corrosion protection is needed.

▪ Dimension

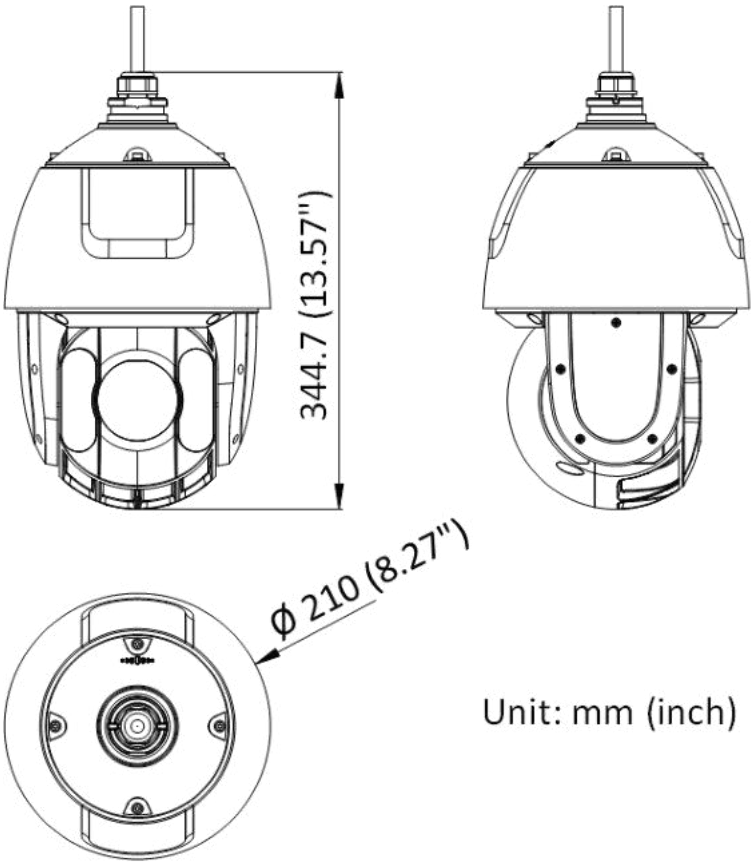

▪ Accessory

▪ Included

DS-1602ZJ


▪ **Optional**

DS-1604ZJ-box	DS-1682ZJ	DS-1100KI	DS-1673ZJ	DS-1660ZJ
				
DS-1005KI	**DS-1681ZJ**	**DS-1663ZJ**	**DS-1662ZJ**	**DS-1619ZJ**
				
DS-1667ZJ	**DS-1604ZJ**	**DS-1604ZJ-pole**	**DS-1661ZJ**	**DS-1604ZJ-BOX-CORNER**
				
DS-1604ZJ-BOX-POLE	**DS-1604ZJ-corner**			
				

**DS-1673ZJ should be used with DS-1661ZJ or DS-1662ZJ.*

Distributed by

Headquarters
No.555 Qianmo Road, Binjiang District,
Hangzhou 310051, China
T +86-571-8807-5998
overseasbusiness@hikvision.com

Hikvision USA
T +1-909-895-0400
sales.usa@hikvision.com

Hikvision Europe
T +31-23-5542770
sales.eu@hikvision.com

Hikvision UK & Ireland
T +01628-902140
sales.uk@hikvision.com

Hikvision UAE
T +971-4-4432090
salesme@hikvision.com

Hikvision Russia
T +7-495-669-67-99
saleru@hikvision.com

Hikvision Australia
T +61-2-8599-4233
salesau@hikvision.com

Hikvision Italy
T +39-0438-6902
info.it@hikvision.com

Hikvision South Africa
Tel: +27 (10) 0351172
sale.africa@hikvision.com

Hikvision Singapore
T +65-6684-4718
sg@hikvision.com

Hikvision Korea
T +82-(0)31-731-8817
sales.korea@hikvision.com

Hikvision India
T +91-22-28469900
sales@pramahikvision.com

Hikvision Brazil
T +55 11 3318-0050
Latam.support@hikvision.com

Hikvision France
T +33(0)1-85-330-450
info.fr@hikvision.com

Hikvision Spain
T +34-91-737-16-55
info.es@hikvision.com

Hikvision Poland
T +48-22-460-01-50
info.pl@hikvision.com

Hikvision Canada
T +1-866-200-6690
sales.canada@hikvision.com

Hikvision Turkey
T +90 (216)521 7070- 7074
sales.tr@hikvision.com

Hikvision Kazakhstan
T +7-727-9730667
nikia.panfilov@hikvision.ru

Hikvision Tashkent
T +99-87-1238-9438
uzb@hikvision.ru

Hikvision Indonesia
T +62-21-2933759
Sales.Indonesia@hikvision.com

Hikvision Thailand
T +662-275-9949
sales.thailand@hikvision.com

Hikvision Malaysia
T +601-7652-2413
sales.my@hikvision.com

Hikvision Vietnam
T +84-974270888
sales.vt@hikvision.com

Hikvision Hong Kong
T +852-2151-1761
info.hk@hikvision.com

Hikvision Colombia
sales.colombia@hikvision.com

© Hikvision Digital Technology Co., Ltd. 2020 | Data subject to change without notice |