DS-2CE76K0T-LMFS
3K Dual Light Audio Fixed Turret Camera



- High quality imaging with 3K, 2960 × 1665 resolution
- 2.8 mm and 3.6 mm fixed focal lens
- Up to 30 m IR distance for bright night imaging
- Up to 20 m white light distance for bright night imaging
- One port for four switchable signals (TVI/AHD/CVI/CVBS)
- Water and dust resistant (IP67)
- High quality audio with audio over coaxial cable, built-in mic
- Smart-Hybrid light, optimize your security with flexible lighting options

▪ Specification

Camera	
Image Sensor	3K CMOS
Max. Resolution	2960 (H) × 1665 (V)
Min. Illumination	0.01 Lux @ (F2.0, AGC ON), 0 Lux with IR
Shutter Time	PAL: 1/25 s to 1/50, 000 s; NTSC: 1/30 s to 1/50, 000 s
Day & Night	ICR
Angle Adjustment	Pan: 0 to 360°, Tilt: 0 to 75°, Rotation: 0 to 360°
Signal System	PAL/NTSC
Lens	
Lens Type	2.8 mm and 3.6 mm fixed focal lens
Focal Length & FOV	2.8 mm, horizontal FOV: 104.9°, vertical FOV: 67.3°, diagonal FOV: 129.8° 3.6 mm, horizontal FOV: 81.3°, vertical FOV: 50.7°, diagonal FOV: 102.4°
Lens Mount	M12
Microphone	
Pickup Distance	In a radius of up to 5 m
Amount	1
Illuminator	
Supplement Light Range	IR : Up to 30 m White Light : Up to 20 m
Supplement Light Type	Smart, IR, White Light
Image	
Image Settings	Brightness, Sharpness, Smart IR
Frame Rate	TVI: 3K@20 fps, 4 MP@25 fps/30 fps, 1080p@25 fps/30 fps AHD: 5 MP@20 fps, 4 MP@25 fps/30 fps CVI: 4 MP@25 fps/30 fps CVBS: PAL/NTSC
Wide Dynamic Range (WDR)	Digital WDR
Image Enhancement	DWDR/BLC/HLC/Global
White Balance	Auto/Manual
AGC	Yes
Day/Night Mode	Auto/Color
Interface	
Video Output	Switchable TVI/AHD/CVI/CVBS
General	
Material	Metal
Dimension	80 mm × Ø85.1 mm (3.1" × Ø3.4")
Weight	Approx. 300 g (0.66 lb.)
Operating Condition	-40 °C to 60 °C (-40 °F to 140 °F), humidity: 90% or less (non-condensation)
Communication	HIKVISION-C
Language	English
Power Supply	12 VDC ± 25% *You are recommended to use one power adapter to supply the power for one camera.
Consumption	Max. 2.9 W

Approval	
Protection	IP67

▪ Available Model

DS-2CE76K0T-LMFS(2.8mm)

DS-2CE76K0T-LMFS(3.6mm)

▪ Dimension

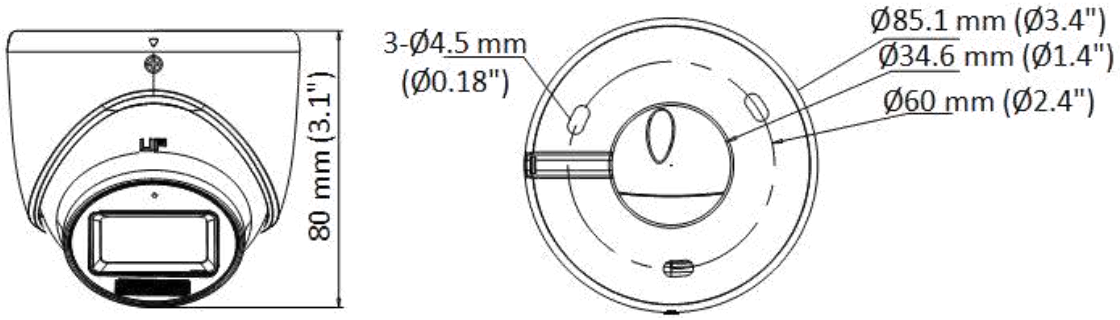

▪ Accessory

▪ Optional

DS-1272ZJ-110-TRS Wall mount	DS-1275ZJ-SUS Vertical pole mount	DS-1276ZJ-SUS Corner mount	DS-1280ZJ-XS Junction box
			
	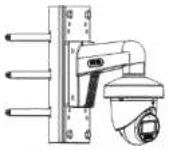	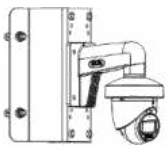	

See Far, Go Further

www.hikvision.com
support@hikvision.com

© Hangzhou Hikvision Digital Technology Co., Ltd. Unless otherwise agreed, Hikvision makes no warranties, express or implied. We reserve the right to introduce modifications without notice.

HIKVISION