DS-2CD1153G0-I
5 MP IR Fixed Network Dome Camera



2.8 mm Fixed Focal Lens



Non 2.8 mm Fixed Focal Lens

Key Features

- 1/2.7" Progressive Scan CMOS
- 2560 × 1920 @15fps
- Color: 0.01 Lux @(F1.2; AGC ON), 0.028 Lux @(F2.0; AGC ON)
- 2.8/4/6 mm fixed lens
- H.265+, H.265, H.264+, H.264
- 3D Digital Noise Reduction
- IP67, IK10

Specifications

Camera	
Image Sensor	1/2.7" Progressive Scan CMOS
Min. Illumination	Color: 0.01 Lux @(F1.2; AGC ON), 0.028 Lux @(F2.0; AGC ON)
Shutter Speed	1/3 s to 1/100,000 s
Slow Shutter	Yes
Auto-Iris	No
Day & Night	IR Cut Filter
Digital Noise Reduction	3D DNR
Wide Dynamic Range	120 dB
3-Axis Adjustment	Pan: 0° to 355°, tilt: 0° to 75°
Lens	
Focal Length	2.8/4/6 mm
Aperture	F2.0
Focus	Fixed
FOV	2.8 mm, horizontal FOV: 100°, vertical FOV: 74°, diagonal FOV: 130° 4 mm, horizontal FOV: 75°, vertical FOV: 55°, diagonal FOV: 98° 6 mm, horizontal FOV: 49°, vertical FOV: 37°, diagonal FOV: 60°
Lens Mount	M12
IR	
IR Range	Up to 30 m
Wavelength	850nm
Compression Standard	
Video Compression	Main stream: H.265/H.264 Sub-stream: H.265/H.264/MJPEG
H.264 Type	Baseline Profile/Main Profile/High Profile
H.264+	Main stream supports
H.265 Type	Main Profile
H.265+	Main stream supports
Video Bit Rate	32 Kbps to 8Mbps
Smart Feature-set	
Region of Interest	Support 1 fixed region for main stream
Image	
Max. Resolution	2560 × 1920
Main Stream	50Hz: 12.5fps (2560 × 1920), 20fps (2560 × 1440), 25fps (2304 × 1296, 1920 × 1080, 1280 × 720) 60Hz: 15fps (2560 × 1920), 20fps (2560 × 1440), 30fps (2304 × 1296, 1920 × 1080, 1280 × 720)
Sub Stream	50Hz: 25fps (640 × 480, 640 × 360, 320 × 240) 60Hz: 30fps (640 × 480, 640 × 360, 320 × 240)
Image Enhancement	BLC/3D DNR
Image Settings	Saturation, brightness, contrast and sharpness are adjustable via client software and web browser
Day/Night Switch	Auto/Scheduled/Day/Night
* Note: The frame rate of the sub-stream cannot exceed the maximum frame rate of the current main stream.	
Network	
Alarm Trigger	Motion detection, video tampering, network disconnected, IP address conflict, illegal login, HDD error, HDD full

Network Storage	NAS (NFS,SMB/CIFS)
Protocols	TCP/IP, ICMP, HTTP, HTTPS, FTP, DHCP, DNS, DDNS, RTP, RTSP, RTCP, PPPoE, NTP, UPnP, SMTP, SNMP, IGMP, QoS, IPv6, UDP, Bonjour, 802.1x
General Function	One-key reset, heartbeat, mirror, password protection, privacy mask, watermark, IP address filter
Firmware Version	V5.5.52
API	ONVIF(PROFILE S,PROFILE G), ISAPI
Simultaneous Live View	Up to 6 channels
User/Host	Up to 32 users 3 levels: Administrator, Operator and User
Client	iVMS-4200, Hik-Connect, iVMS-5200, iVMS-4500
Web Browser	IE8+, Chrome 31.0-44, Firefox 30.0-51, Safari 8.0+
Interface	
Communication Interface	1 RJ45 10M/100M self-adaptive Ethernet port
Reset Button	Yes
General	
Operating Conditions	-30 °C to +60 °C (-22 °F to +140 °F), Humidity 95% or less (non-condensing)
Power Supply	12 VDC ± 25% PoE: 802.3af, class 3
Power Consumption and Current	12 VDC, 0.5 A, max. 6 W PoE (802.3af, 36 to 57 V), 0.2 A to 0.1 A, max. 7.5 W
Protection Level	IP67, IK10
Material	Bubble: plastic, bottom base: metal
Dimensions	Camera: Ø 111 mm × 82.4 mm (4.4" × 3.2") With package: 134 mm × 134 mm × 108 mm (5.3" × 5.3" × 4.3")
Weight	Camera: approx. 400 g (0.9 lb.) With package: approx. 600 g (1.3 lb.)

Available Model:

DS-2CD1153G0-I (2.8/4/6 mm)

▪ Typical Application

Hikvision products are classified into three levels according to their anti-corrosion performance. Refer to the following description to choose for your using environment.

This model has NO SPECIFIC PROTECTION.

Level	Description
Top-level protection	Hikvision products at this level are equipped for use in areas where professional anti-corrosion protection is a must. Typical application scenarios include coastlines, docks, chemical plants, and more.

Moderate protection	Hikvision products at this level are equipped for use in areas with moderate anti-corrosion demands. Typical application scenarios include coastal areas about 2 kilometers (1.24 miles) away from coastlines, as well as areas affected by acid rain.
No specific protection	Hikvision products at this level are equipped for use in areas where no specific anti-corrosion protection is needed.

Dimensions

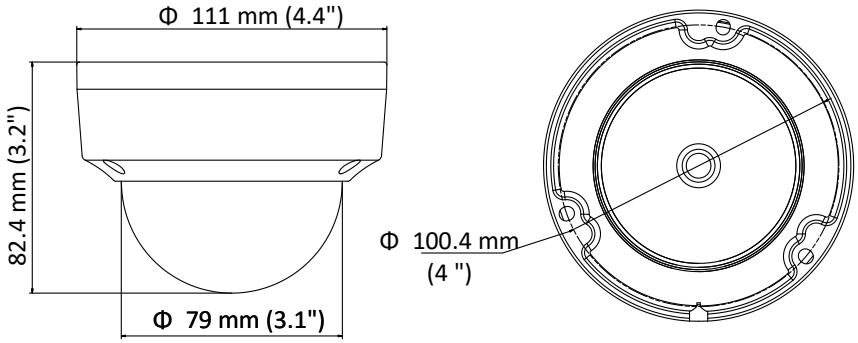

Accessory



DS-1259ZJ
Inclined Ceiling Mount



DS-1271ZJ-110
Pendant Mount



DS-1272ZJ-110
Wall Mount



DS-1272ZJ-110B
Wall Mount



DS-1276ZJ-SUS
Corner Mount



DS-1280ZJ-DM18
Junction Box



DS-1258ZJ
Wall Mount



DS-1253ZJ-M
Rain Shade



DS-1250ZJ
Rain Shade



DS-1275ZJ-SUS
Vertical Pole Mount

Distributed by

Headquarters
No.555 Qianmo Road, Binjiang District,
Hangzhou 310051, China
T +86-571-8807-5998
overseasbusiness@hikvision.com

Hikvision USA
T +1-909-895-0400
sales.usa@hikvision.com

Hikvision Europe
T +31-23-55-42-770
info.eu@hikvision.com

Hikvision Middle East
T +971-4-8816086
salesme@hikvision.com

Hikvision Russia
T +7-495-669-67-99
saleru@hikvision.com

Hikvision India
T +91-22-28469900
sales@pramahikvision.com

Hikvision Italy
T +39-0438-6902
info.it@hikvision.com

Hikvision France
T +33(0)1-85-330-450
info.fr@hikvision.com

Hikvision Spain
T +34-91-737-16-55
info.es@hikvision.com

Hikvision Poland
T +48-22-460-01-50
poland@hikvision.com

Hikvision UK
T +01628-902140
support.uk@hikvision.com

Hikvision Singapore
T +65-6684-4718
sg@hikvision.com

Hikvision Oceania
T +61-2-8599-4233
salesau@hikvision.com

Hikvision Canada
T +1-909-895-0400
sales.usa@hikvision.com

Hikvision Korea
T +82-31-731-8841
sales.korea@hikvision.com

Hikvision Brazil
T +55 11 3318-0050
Latam.support@hikvision.com

Hikvision Africa
T +27 (10) 0351172
sale.africa@hikvision.com

Hikvision Hong Kong
T +852-2151-1761

© Hikvision Digital Technology Co., Ltd. 2019 | Data subject to change without notice |

05055220211223