COMPANICS
Communication & Electronics LTD

כומפניקס תקשורת ואלקטרוניקה בע"מ
הבורסקאי 1 א.ת. סגולה, פ"ת | ספק מ. הביטחון: 83524121 | ח.פ: 512109968
03-9049004 טל' / | www.companics.co.il | sales@companics.co.il

audio-line

Instruction Manual

MOBILE DISPLAY FLOOR STAND

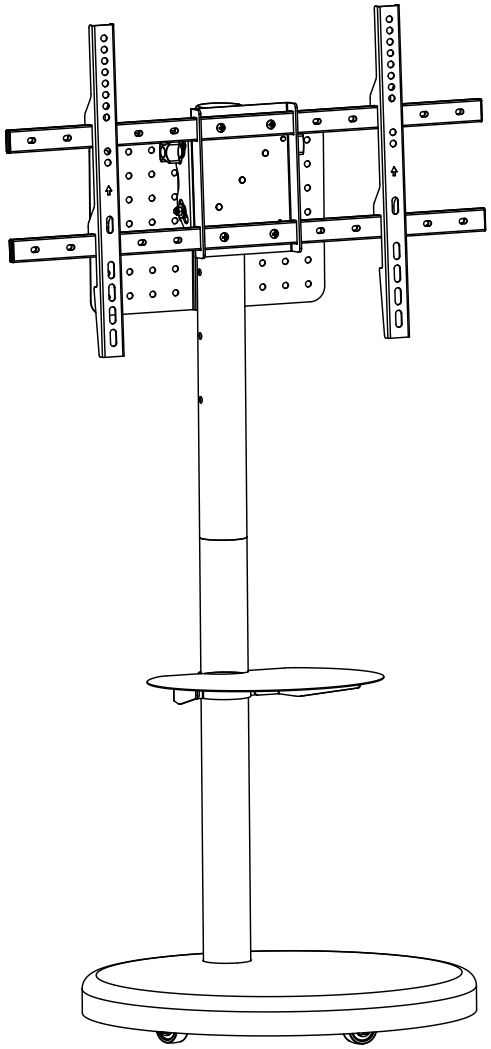

AL-75
AL-75W

VESA Compatible
200x200 300x200
400x200 300x300
400x300 400x400
600x400

86" MAX

TV RATED 50kg/110lbs

DVD RATED 5kg/11lbs

EN

IMPORTANT:
Failure to read, thoroughly understand, and follow all instructions can result in serious personal injury, damage to equipment, or voiding of factory warranty.

INSTRUCTIONS OF SAFETY AND WARNINGS:

- Make sure that the mounting surface is strong enough to handle a mounted product and equipment.
- DO NOT EXCEED THE MAXIMUM LISTED WEIGHT CAPACITY.
- Always use an assistant or a mechanical lifting device to safely lift and position heavy products.
- Tighten screws firmly, but do not over tighten. Over tightening can cause product damage that greatly reduces the holding power.
- Keep a clear area and distance from moving parts when using the product.
- Use only as intended. Never stand, hang or climb on the product.
- This product is intended for indoor use only.
- Any attempts to reconstruct the construction aren't allowed.
- This product may contain small items that could be a choking hazard if swallowed. Keep children away unless the product is intended for their use and all instructions and manuals are fully reviewed and understood by them.
- Check that the product is secure and safe to use at regular intervals (at least every three months).

Should you ever have any questions or feel you require help please contact your place of purchase for assistance.

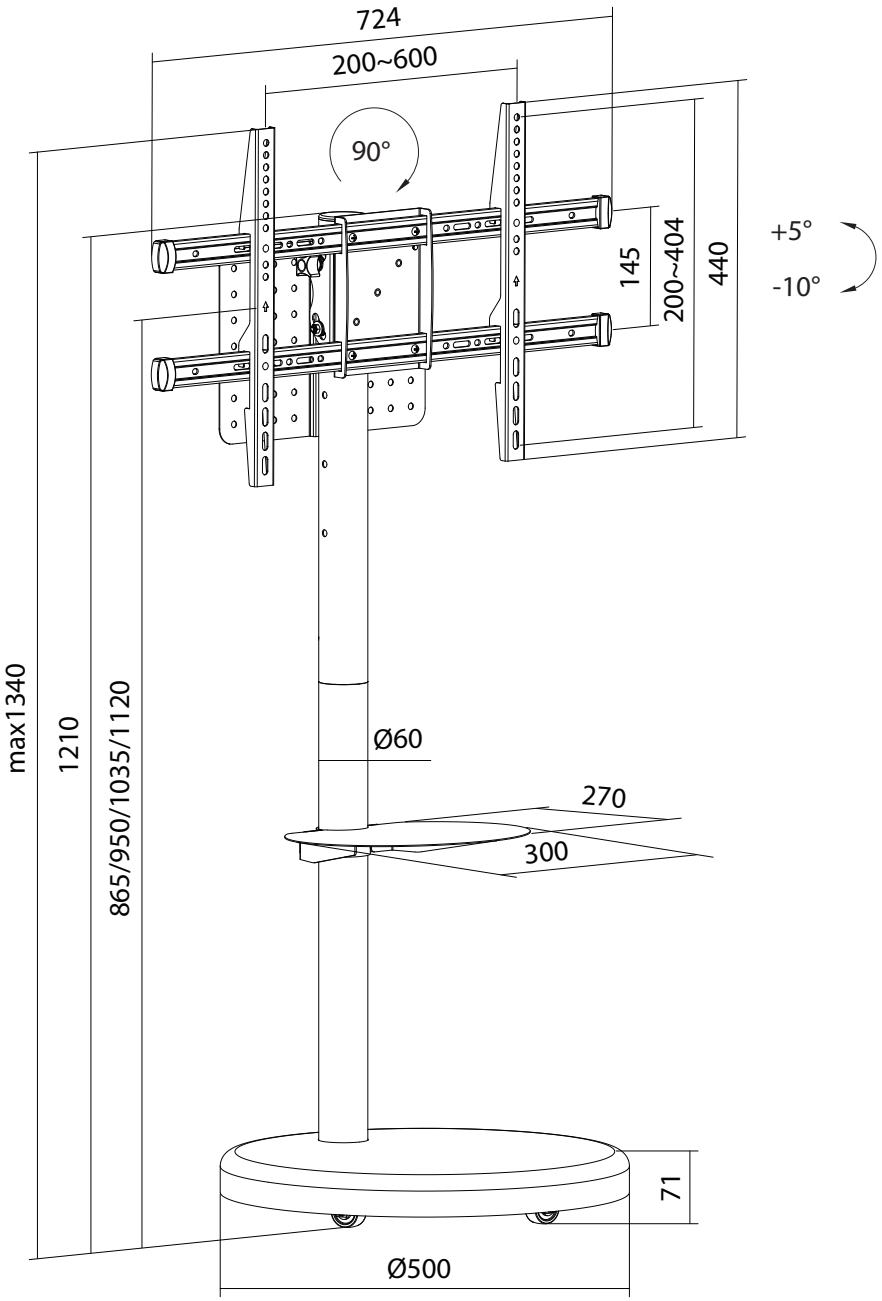

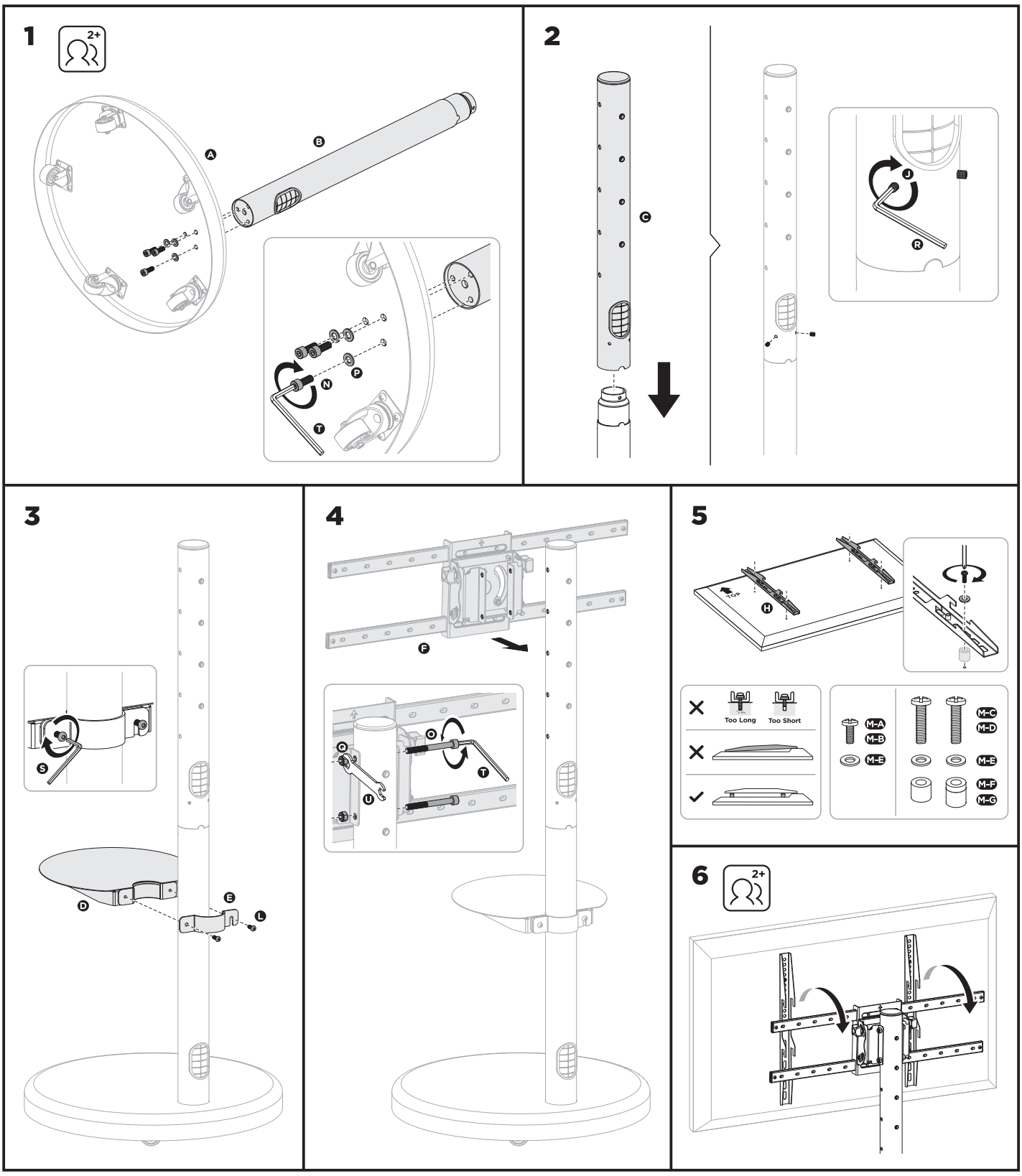
1
2+
A
B
N
P
T
2
C
J
R
3
S
D
E
L
4
F
Q
O
T
U
5
H
Too Long
Too Short
M-A
M-B
M-E
M-C
M-D
M-E
M-F
M-G
6
2+

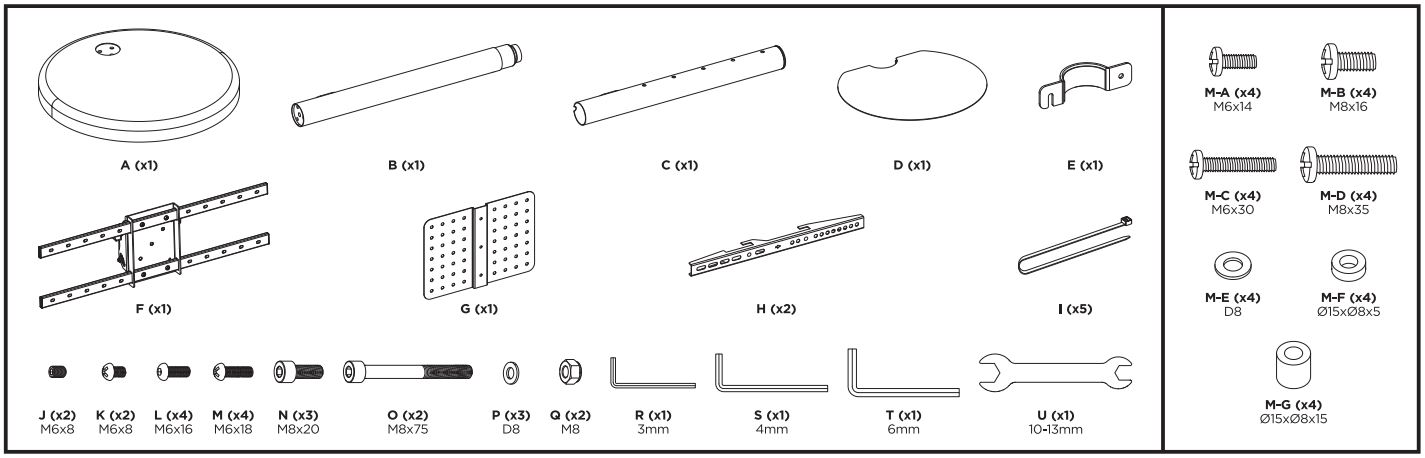
A (x1)
B (x1)
C (x1)
D (x1)
E (x1)
F (x1)
G (x1)
H (x2)
I (x5)
J (x2) M6x8
K (x2) M6x8
L (x4) M6x16
M (x4) M6x18
N (x3) M8x20
O (x2) M8x75
P (x3) D8
Q (x2) M8
R (x1) 3mm
S (x1) 4mm
T (x1) 6mm
U (x1) 10-13mm
M-A (x4) M6x14
M-B (x4) M8x16
M-C (x4) M6x30
M-D (x4) M8x35
M-E (x4) D8
M-F (x4) Ø15xØ8x5
M-G (x4) Ø15xØ8x15

7

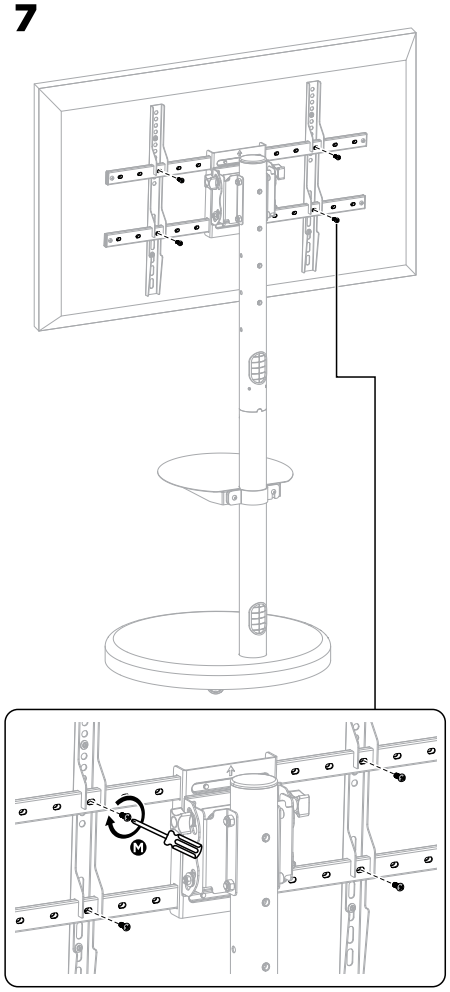

8

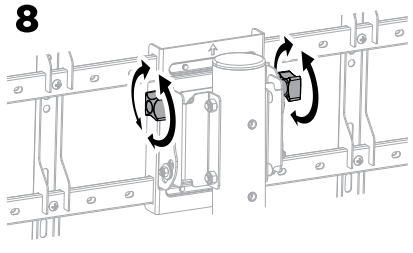



Note: *If the display does not stop at your desired position, adjust the knobs as shown.*

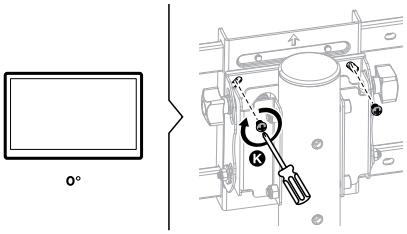

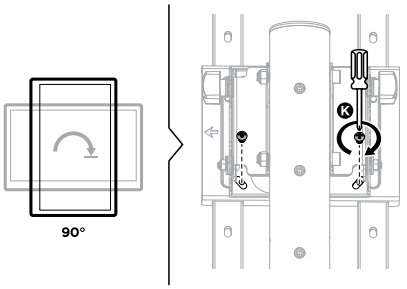

9

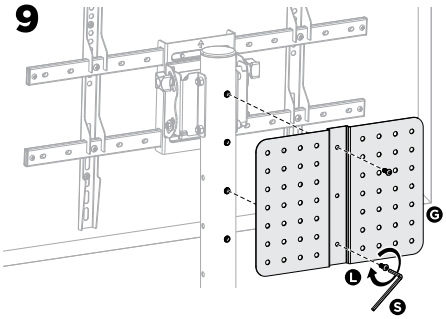

10

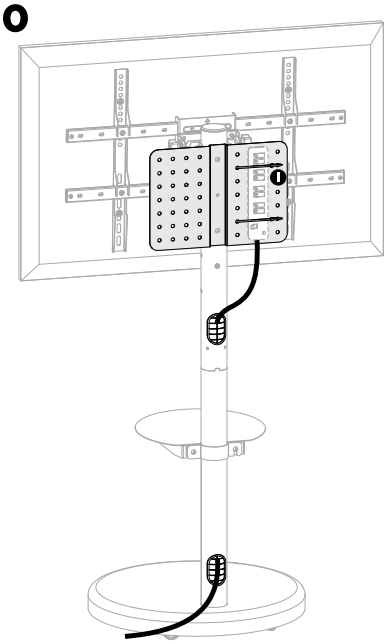

כומפניקס תקשורת ואלקטרוניקה בע"מ

ברגמן 8, א.ת. סגולה, פ"ת | ספק מ. הביטחון: 83524121 | ח.פ: 512109968

sales@companics.co.il | www.companics.co.il | טל' / 03-9049004