COMPANICS
Communication & Electronics LTD

כומפניקס תקשורת ואלקטרוניקה בע"מ
הבורסקאי 1 א.ת. סגולה, פ"ת | ספק מ. הביטחון: 83524121 | ח.פ: 512109968
03-9049004 / טל' | www.companics.co.il | sales@companics.co.il

Model Number 16680/1
INSTALLATION AND OPERATION

Mixer Amplifiers with Mp3/FM/BT

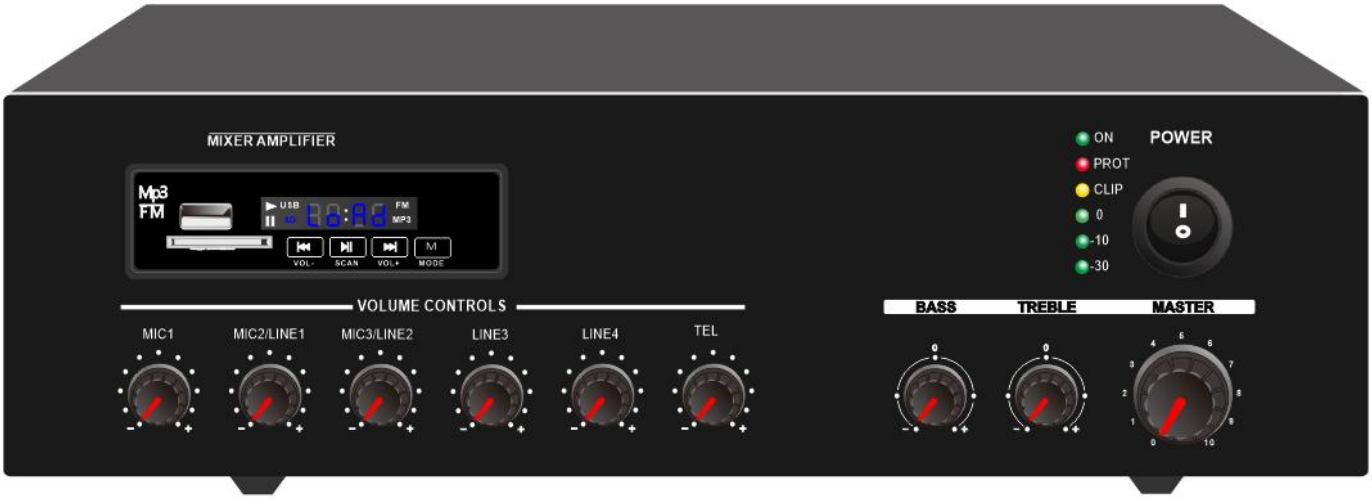

Caution: Please read this manual carefully before operating
Damage caused by misuse is not covered by the warranty

SAFTY WARNINGS!

1. Read and keep these instructions.
2. Heed all warnings and follow all instructions.
3. Do not use this apparatus near water.
4. Do not block any ventilation openings. Install in accordance with the manufacturer's instructions.
5. Do not install near any heat sources such as radiators, heat registers, stoves, or other apparatus that produce heat.
6. Do not defeat the safety purpose of the polarized or grounding-type plug. A polarized plug has two blades with one wider than the other. A grounding type plug has two blades and a third grounding prong. The wide blade or the third prong is provided for your safety. If the provided plug does not fit into your outlet, consult an electrician for replacement of the obsolete outlet.
7. Protect the power cord from being walked on or pinched particularly at plugs, convenience receptacles, and the point where they exit from the apparatus.
8. Only use attachments/accessories specified by the manufacturer.
9. Use only with the cart, stand, tripod, bracket, or table specified by the manufacturer, or sold with the apparatus. When a cart is used, use caution when moving the cart/apparatus combination to avoid injury from tip-over.
10. Unplug this apparatus during lightning storms or when unused for long periods of time.
11. Refer all servicing to qualified service personnel. Servicing is required when the apparatus has been damaged in any way, such as power-supply cord or plug is damaged, liquid has been spilled or objects have fallen into the apparatus, the apparatus has been exposed to rain or moisture, does not operate normally, or has been dropped.
12. This appliance shall not be exposed to dripping or splashing water and that no object filled with liquid such as vases shall be placed on the apparatus.
13. Plug this apparatus to the proper wall outlet and make the plug to be disconnected readily operable.
14. Main plug is used as disconnected device and it should remain readily operable during intended use. In order to disconnect the apparatus from the mains completely, the mains plug should be disconnected from the mains socket outlet completely.
15. WARNING: To reduce the risk of fire or electric shock, do not expose this apparatus to rain or moisture.
16. An appliance with a protective earth terminal should be connected to a mains outlet with a protective earth connection.

WARNING!

TO PREVENT FIRE OR SHOCK HAZARD, DO NOT USE THE PLUG WITH
AN EXTENSION CORD, RECEPTACLE OR OTHER OUTLET UNLESS THE BLADES
CAN BE FULLY INSERTED TO PREVENT BLADE EXPOSURE.
TO REDUCE THE RISK OF FIRE OR ELECTRIC SHOCK, DO NOT EXPOSE
THIS APPLIANCE TO RAIN OR MOISTURE.
TO PREVENT ELECTRICAL SHOC
K, MATCH WIDE BLADE PLUG TO WIDE SLOT, FULLY INSERT.

The lightning flash with arrowhead symbol, within an equilateral triangle, is intended to alert the user to the presence of uninsulated "dangerous voltage" within the product's enclosure that may be of sufficient magnitude to constitute a risk of electric shock to persons.

CAUTION

RISK OF ELECTRIC SHOCK
DO NOT OPEN

WARNING: TO REDUCE THE RISK OF ELECTRIC SHOCK, DO NOT REMOVE COVER (OR BACK).
NO USER SERVICEABLE PARTS INSIDE.
REFER SERVICING TO QUALIFIED SERVICE PERSONNEL.

The exclamation point within an equilateral triangle is intended to alert the user to the presence of important operating and maintenance (servicing) instructions in the literature accompanying the appliance.

INTRODUCTIONS

Description

The Mixer Amplifier with MP3, FM tuner & blue tooth, its rated power output from, 60W to 120W, it is ideal for school, super market, bank, hotel BGM and speech use. It is all in one solution with two sources, pre amplifier and mixer power amplifier into one unit, which is economy but of high reliable performance.

It integrates 2 audio sources into a mixer amplifier, plus Mic1(XLR) and Mic/Line input 2-3 (6.3mm Jack), two line inputs, one Tel input and one line output. Mic1 VOX with highest priority except Tel input. One USB and one SD slots on front provide easy access and operation for installer and end-user.

The amplifier is designed with complete protection of overload, short circuit and high temp to avoid any damage.
These amplifiers are suitable for applications in bank, mosque, school, hotel, restaurant, theme centers and shopping center.

Features

- Compact mini size public address amplifier
- Ideal for classroom sound system use
- Built-in 100V/70V transformer technology
- Tabletop amplifier with Mp3 player, FM radio & blue tooth
- Rate power output at , 60W to 120W.
- Speaker output of 100V or 70V & 4Ohms-8 Ohms-16 Ohms
- Mp3 player with USB/SD input on front panel, IR remote control for Mp3 player, FM radio and blue tooth
- LED indicators for power, clip, protect and signal
- Mic1-3 and line 1-2 and telephone input. Mic1 of balanced XLR input with phantom power on rear panel. Mic2-3 microphone or line switchable unbalanced 6.3mm phone jack input. Line 1-2 input of RCA input and one RCA line output. Telephone input with VOX priority and MOH (Music on Hold).
- Volume control for Mic1-3, line1-2, Mp3/FM, bass/treble and master
- With short-circuit, clip, overload and high temp protection
- AC220V or 115V & 24V DC both operation system

FRONT PANEL

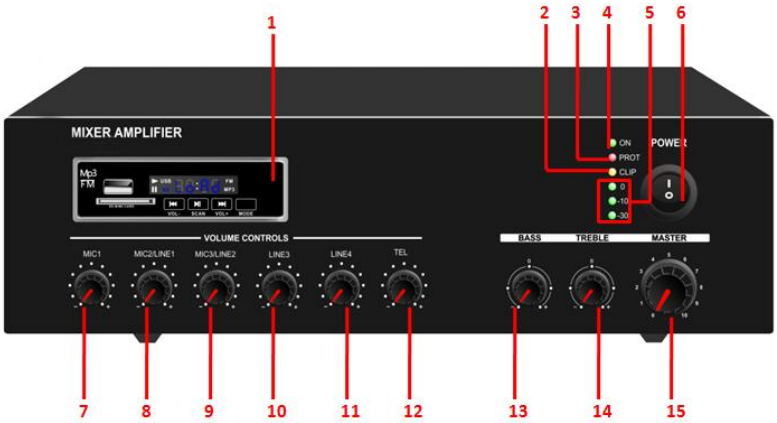

1. Mp3/FM/Blue tooth media player module.
2. Power indicator.
3. Protection Indicator.
4. Clip Indicator.
5. Output Level Meters.
6. AC power switch.
7. Mic1 Attenuator.
8. Mic/Line Input 2 Attenuator.
9. Mic/Line Input 3 Attenuator.
10. Line Input 1 Attenuator.
11. Line Input 2 Attenuator.
12. Tel Input Attenuator
13. Bass
14. Treble
15. Master Volume Control

REAR PANEL

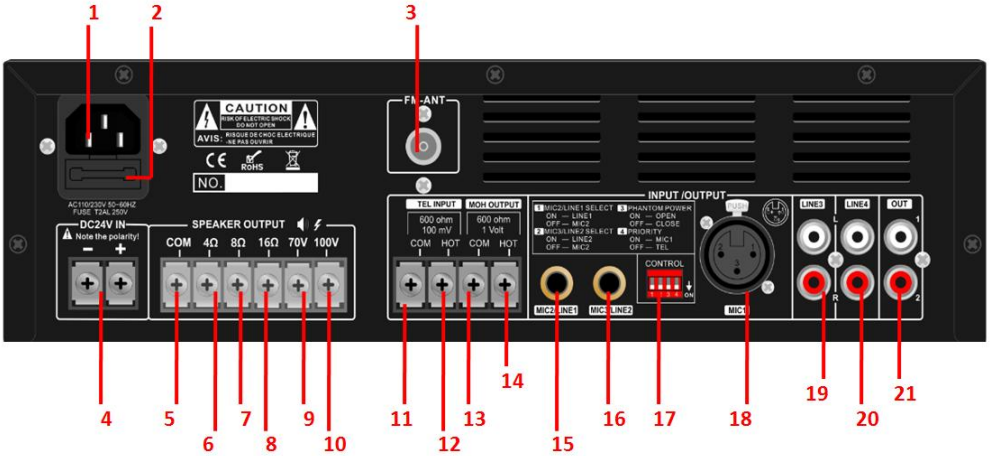

1. AC Power Socket.
2. AC fuse
3. FM antenna
4. 24V DC Battery Input.
5. Speaker output COM.
6. Speaker output 4 Ohms (+).
7. Speaker output 8 Ohms (+).
8. Speaker output 16 Ohms (+).
9. Speaker output 70V (+).
10. Speaker output 100V (+).
11. Tel input COM (-).
12. Tel input HOT (+), 600 Ohms, 1 Volt.
13. MOH output COM (-).
14. MOH output HOT (+).
15. Input 2 Mic/Line Selector.
16. Input 3 Mic/Line Selector.
17. Dipswitch for MIC/LINE selector, phantom power and microphone priority.
18. Microphone 1 input.
19. Line 3 Input.
20. Line 4 Input.
21. Line Output.

Male XLR-3P:
Pin1-Ground
Pin2-Positive signal
Pin3- Negative signal

AMPLIFIER OPERATION GUIDANCE

100V Line System

For 100V line systems, connect the amplifier to the first speaker in the system using double-insulated speaker wire which has adequate current rating to handle the total output of the amplifier.

Connect the “100V” output terminal to the positive (+) connection of the speaker and “COM” output to the negative (-) connection of the speaker. Connect further speakers in parallel to the first speaker with all positive terminals and connected together and all negative terminals connected together as shown below.

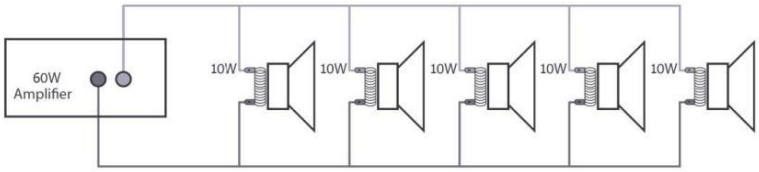

A 100V line speaker system can comprise of many speakers connected together. The determining factor for how many speakers can be used on a single amplifier is the power rating. For most purposes, it is advised to connect as many speakers as needed with a combined wattage of no more than 90% of the amplifier’s output power rating.

The terminals of a 100V speaker are connected to a transformer and in some cases, this transformer may be “tapped” for different power ratings. These tappings can be used to adjust the wattage (and output volume) of each speaker in the system to help achieve the ideal total power of the system for the amplifier.

The mixer amplifier is featured of 6 speaker zone outputs, either one of six zone or total six zone power loading shall be equivalent or no higher than the rated power of the amplifier.

Speaker Terminals

These terminals are offering 3 low voltage outputs 4Ω, 8Ω, 16Ω depending on your speaker combination. A 70V/100V commercial output is also available. Please note that one wire only should be connected to COM screw and one wire to the selected impedance or voltage. **Multiple combinations cannot be done at the output level.** Four different types of connections are provided. The low impedance section: 4Ω, 8Ω, 16Ω is designed for a small amount of speakers to be connected to your amplifier. The 70V/100V section is especially designed for a multiple speaker distribution. When using the 70V/100V output, speakers have to be equipped with 70V/100V transformer. The maximum amount of speakers to be placed on your distribution line is in relation to the power allocated to each speaker. The total wattage set on the secondary side of the transformers on your speaker line must not exceed the maximum RMS output power: 30W, 60W or 120W. Failure to respect this may cause permanent damage to the amplifier.

Speaker Connections

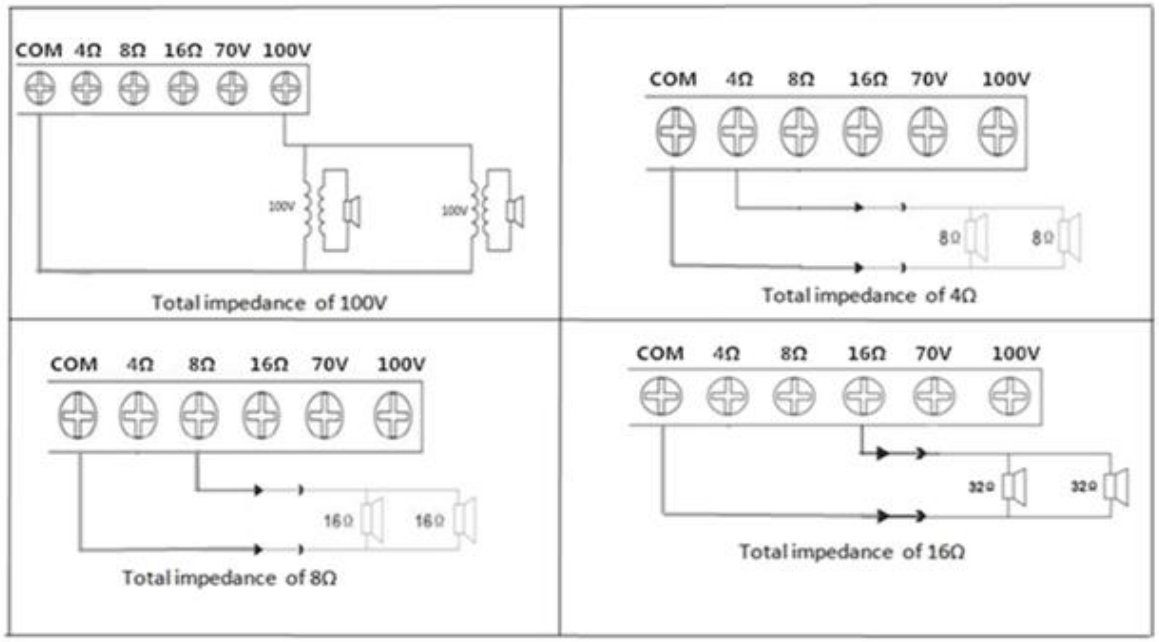

Operation Steps

- When all connections to the amplifier are made, turn all rotary controls down and switch on the power and a power “ON” LED will illuminate. Turn BASS and TREBLE controls to the 12 o’clock position (pointing straight up) and turn MASTER rotary control up part way for testing.
- Ensure a signal is being fed to one of the line inputs 1, 2, 3, 4 or 5 and gradually increase the volume control for that channel until the output is heard through the speakers. Turn up the MASTER to the maximum required volume level and reduce the channel volume control if necessary.
- Note: The initial test can be made using the built-in USB/SD/FM audio player. The output of the amplifier is represented on the level meter LEDs and care should be taken that the Red “0” LED is only lit momentarily during use. Anything longer than a short flash of this LED may be indicating distortion or clipping of the output signal and the MASTER should be turned down.
- If a microphone is connected to MIC1 input, make sure it is switched on and if it requires phantom power, make sure this feature is enabled. Gradually increase its volume control whilst speaking into the microphone until the required volume level is reached. The microphone should not be able to “hear” the speakers, which can cause feedback (squealing or howling noise).
- If the VOX feature is enabled, audio playback through channels 2-5 will be reduced in volume automatically when speaking into MIC 1, use its attenuator to increase or decrease the mute level.
- In addition to channel and MASTER volume controls, there are BASS and TREBLE EQ controls to adjust the tone of the overall output. At the 12 o’clock position, these controls are applying no effect to the signal (no boost or cut). Moving the BASS control clockwise boosts the low frequencies in the audio, whilst moving it anticlockwise will cut these low frequencies. Likewise, moving the TREBLE control clockwise boosts the high frequencies in the audio, whilst moving it anticlockwise will cut these high frequencies. Adjust these EQ controls to suit the type of audio signal or compensate for the room acoustics.

USB/SD Playback

Push a USB pen drive into the USB port and/or an SD card into the SD card input.

Press the CD/USB/SD button to ensure that the player is set to play from the required memory device. Press the PLAY/PAUSE button to play the current track and press again to pause as needed.

Searching and playback of tracks is the same as described above for the CD player

FM Tuner

Press the FM select button to switch to the FM tuner function. Use the Previous or Next buttons to select a stored channel.

Tuning and storing stations

Use the Forward/Reverse seek buttons to manually tune the frequency in steps of 0.05MHz

Alternatively, press and hold the Forward/Reverse seek buttons to auto search for available stations.

Upon finding a station, the auto search will stop, giving the option to store this station.

At this point, pressing the PLAY/PAUSE button will flash a “00” channel number in the display.

Use the Previous/Next buttons to select an appropriate channel memory.

Press PLAY/PAUSE again to confirm and store the station into the selected channel memory.

Auto search can be stopped at any time by pressing the Forward/Reverse seek buttons.

Mute On/Off

Pressing the MUTE ON/OFF button will mute the output of the audio player.

Pressing and holding the MUTE ON/OFF button will put the audio player in standby mode.

Press this button again to restore functions from standby mode.

Music on Hold

This output will feed music on your telephone system or PABX for people waiting to be answered. A dedicated input should be available on your telephone system. Please refer to a qualified technician if you can't identify this input. Outgoing signal should be connected to G and H.

Telephone Paging Input

This special TEL input will allow you to page in your PA system using your own telephone set or PABX system. At the end of the announcement, the system will return to its normal operation. The telephone paging input with priority except EMC (fire alarm) input. Final volume adjustment will be made with the Tel Paging volume control located on front panel.

CONNECTION DIAGRAMS

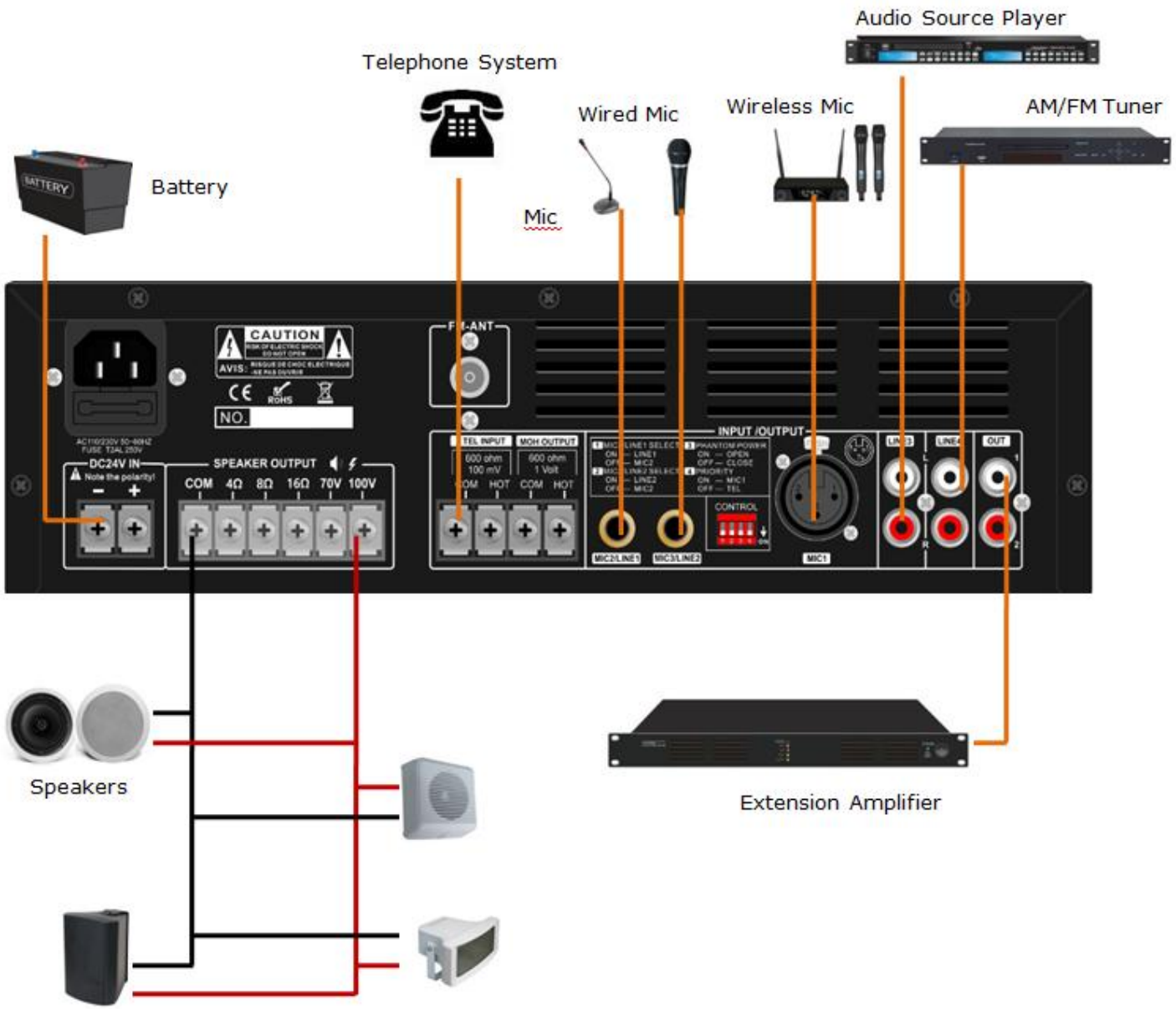

SPECIFICATION SHEET

Item	Mixer Amplifiers with USB/SD & FM & Blue Tooth, 60W, 120W	
Model	**16680**	**16681**
Rated Power Output	60W	120W
Speaker Output	70V, 100V and 4-16 ohms	
Input	Mic1-3: 600 ohms 5-8 mV, unbalanced, Line1-2: 10k ohms 150-470 mV, unbalanced	
Frequency Response	60-15KHz	
THD	<0.5% at 1kHz, 1/3 rated power	
S/N Ratio	Line: 85 dB , MIC: >72 dB	
Protection	High temp, short circuit, overload protection	
Power Supply	AC230V or AC24V, 50-60Hz	
Power Consumption	100W	200W
Dimension	300(W)×275(D)×88(H)mm	
Weight	6.6kg	7.8kg

כומפניקס תקשורת ואלקטרוניקה בע"מ
ברגמן 8, א.ת סגולה, פ"ת|ספק מ. הביטחון: 83524121|ח.פ: 512109968
טל': 03-9049004|sales@copa.co.il|www.copa.co.il| 03-9049004