Since 1968

COMMAX
SmartHome & Security

User Manual

Fineview Video Phone CDV-70N / CDV-70ND

www.commax.com

COMMAX Co.,Ltd.

- Thank you for purchasing COMMAX products.
- Please carefully read this User's Guide (in particular, precautions for safety) before using a product and follow instructions to use a product exactly.
- The company is not responsible for any safety accidents caused by abnormal operation of the product.

Table of Contents

1. Greetings 1
2. Warnings and Cautions.....2
3. Part Names and Functions 4
4. Package Contents 4
5. Wiring and Connection Instructions. 4
6. Operation 5
7. Settings 6
8. Installation 8
9. Specifications and Features.....9
10. Safe Operation guide 9

1. Greetings

- Thank you for Purchasing COMMAX Products
- Please carefully read this User's Manual (in particular, precautions for safety) before using a product and follow instructions to use a product exactly.

2. Warnings and cautions

Please follow the things described below in order to prevent any danger or property damage.

Warning	It may cause a serious damage or injury if violated.
Caution	It may cause a minor damage or injury if violated.

- Prohibition.
- No disassembly
- No touch
- Must follow strictly.
- Shows plugging out the power cord without an exception
- Shows the warning and caution for an electric shock.
- Shows the warning and caution for a fire.

Warning

Power & Installation

Please don't use several products at the same time on one power socket.
· It may cause a fire due to an abnormal overheating.

Prohibition Fire

Please don't bend the power cable excessively or it may cause an electric shock.
· fire when using a damaged power cable.

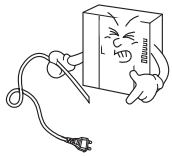

Prohibition Electric shock Fire

Please don't handle the power cable with a wet hand.
· It may cause an electric shock.

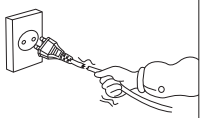

Prohibition Fire

Please plug out the power cable from the socket when not using it for a long period of time.
· It may shorten the product lifespan or cause a fire.

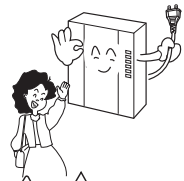

Request Fire

Please don't install the product in the place where there is much oil, smoke or humidity.
· It may cause an electric shock or fire.

Prohibition Electric shock Fire

Please don't install the product with the lightening and thunder.
· It may cause an electric shock or fire.

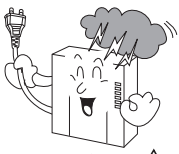

Prohibition Electric shock Fire

Please don't use and connect this product with other products with different rated voltage
· It may cause a disorder or fire.

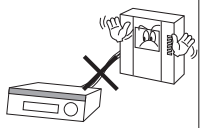

Prohibition Fire

When installing the product that generates heat, please install the product away from the wall (10cm) for the ventilation.
· It may cause a fire due to the increased internal temperature.

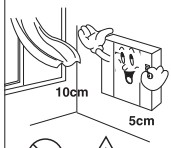

Prohibition Fire

Warning

Cleaning & Use

Please don't disassemble, repair or rebuild this product arbitrarily (please contact the service center if a repair is needed.
· It may cause an electric shock or fire.

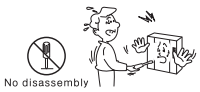

Electric shock Fire Unplug

If an abnormal sound, burning smell or smoke is coming out of the product, please plug out the power cable and contact a service center.
· It may cause an electric shock or fire.

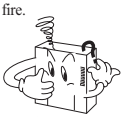

Electric shock Fire

Please don't insert any metallic or burnable materials into the ventilation hole.
· It may cause an electric shock or fire.

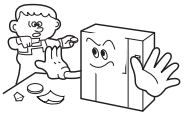

Prohibition Electric shock Fire

Please use only the designated batteries for the products of using DC power.
· It may cause an electric shock or fire.

Request

Caution

Power & Installation

Please plug the power cable firmly into the inner end
· It may cause a fire.

Request Fire

Please hold the plug tightly when unplugging the power cable (a part of the copper wire may be disconnected if the grabbing is only made on the cord when pulling out the cable).
· It may cause an electric shock or fire

Request Electric shock Fire

When connecting the power cables after cutting the cable, please install the product with power off
· It may cause an electric shock or fire

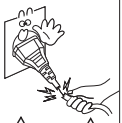

Request Electric shock Fire

When installing the product, please fix it firmly while using the wall-mounting unit and screws.
· It may cause an injury from the falling object.

Request

Please be careful when using an AC circuit breaker since there is a possibility of an electric shock.

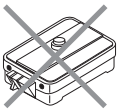

Request Electric shock

Please check the use voltage and current for the DC-only products and use the appropriate rectifier.
· It may cause a fire.

Request Fire

Please avoid direct rays of the sun or heating devices at a time of installation.
· It may cause a fire.

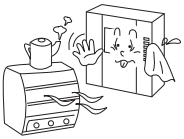

Request Overheating Fire

Please don't install the product on an unstable place or small support board.
· It may cause an injury if it falls down while in use.

Request

Cleaning & Use

When cleaning the product, please rub it with a soft and dry cloth after plugging out the power cable. (Please don't use any chemical products such as wax, benzene, alcohol or cleanser.)

Prohibition

Please don't drop the product on the ground and don't apply a shock .
· It may cause a failure.

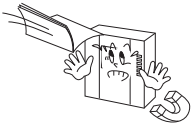

Prohibition

Please use the designated connection cable within the maximum calling distance designated for the product
· It may reduce the product performance.

Request

COMMAX

3. Parts Names

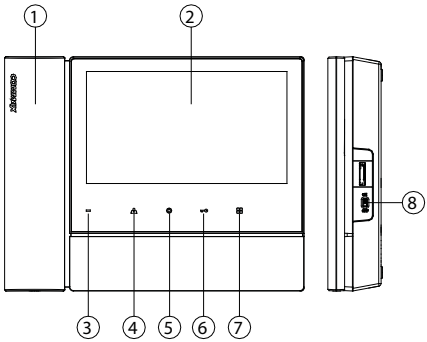

① HANDSET
② TFT-LCD
③ POWER LED
④ MONITORING BUTTON
⑤ INTERPHONE BUTTON
⑥ DOOR OPEN BUTTON
⑦ MENU BUTTON
⑧ POWER SWITCH

4. Package Contents

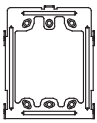

Wall bracket for monitor (1EA)

Monitor fixing screw (1EA)

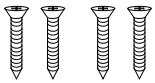

Wall bracket mounting screw (4EA)

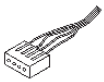

Connector (1EA)

User Manual (1EA)

5. Wiring and Connection Instructions

▷ Polarity of the camera connector

1. Red: Talk (Audio)
2. Blue: GND
3. Yellow: Power (+12V)
4. White: Video

▷ Polarity of interphone connector

1. Red: Talk (Audio)
2. Blue: GND
3. Yellow: Power (+14V)
4. White: Call signal

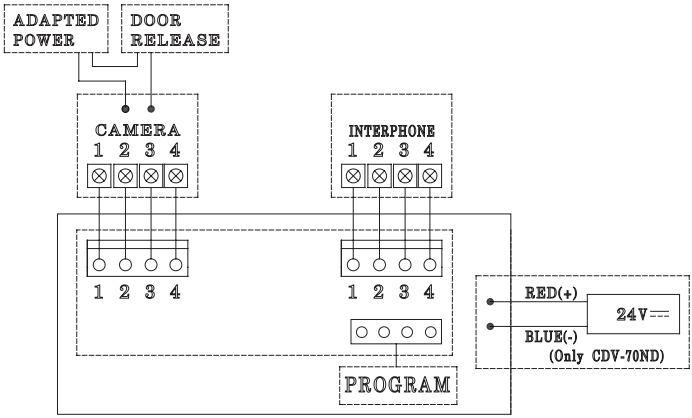

6. Operation

※ **Caution : Do not hold the handset at your ear when you press hook switch to switch call.**

1. Calling of visitor

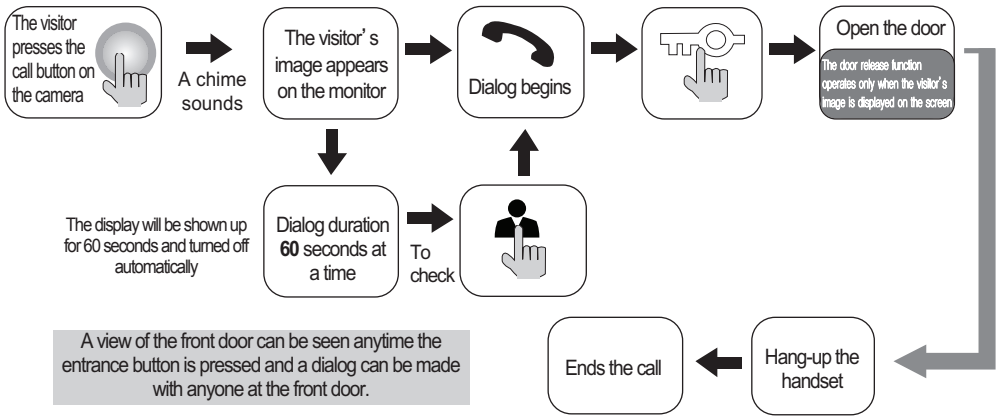

2. Communication with the optional Interphone

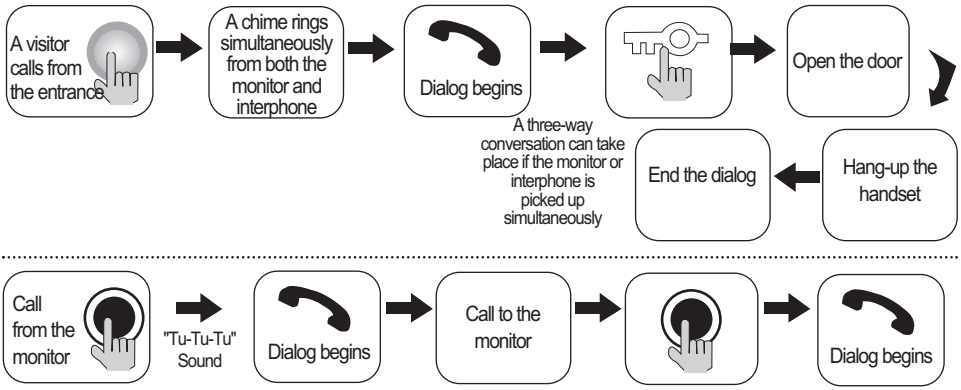

Dialog between the interphone and camera is possible only when the visitor's image is visible on the monitor screen.

3. Monitoring : function to see the image of visitor in the entrance.

(stand-by mode) Operation

- By pressing the Monitor button repeatedly, the monitor will work as following in order.

Camera ➡ OFF ➡ Camera .....

7. Settings

- You can adjust DOOR VIDEO SET, UTILITY and check INFORMATION(model name &version) with (UP)△ / (DOWN)▽ button after pressing Menu button on the front of the product in video talk mode or stand-by monitoring.

- **Products settings need the following 4 buttons on the right of product.**

* Start Menu / Exit : MENU button * Select and in-put : SELECT (Interphonebutton)
* Move up / Move right : △/▷(Open button)
* Move down / Move left : ▽/◁(Monitoring button)

7-1. Screen setting (Brightness/Contrast/Color adjustment function)

Press the Menu button and access to DOOR VIDEO SET and enter the setting menu by pressing SELECT button.

(1) BRIGHTNESS : Adjusting Brightness of Screen

(2) CONTRAST : Adjusting Contrast of Screen

(3) COLOR : Adjusting Color of Screen

※ How to adjust

① Move to Menu you want to adjust with △/▽ button on the list of DOOR VIDEO SET

② Press SELECT button to choose an icon.

③ Adjust the set value with ◁/▷button

④ To complete the set, press SELECT button.

(4) RESET : Initializing

※ How to Reset

① Move to RESET menu in DOOR VIDEO SET menu

② Press SELECT to enter the menu.

③ Select YES with ◁/▷button

④ Press SELECT button.

(5) EXIT : Go back to setting mode

7-2. UTILITY(additional function)

Press the Menu button and access to Utility SET and enter the menu by pressing SELECT button.

(1) CHIME-BELL VOLUME : setting call sound level

① Move to CHIME-BELL VOLUME icon with △ /▽ button in UTILITY Menu.
② Press SELECT to enter the menu.
③ Adjusting call level : 0(MUTE) ~ 3(MAX)
④ To complete the set, press SELECT button.

(2) SCREEN MODE : to set for screen ratio
① ZOOM: Zoon in(expansion) image maintaining actual ratio(4:3) is shown. (full of the screen)
② 4:3: Image of 4:3 ratio without expansion is shown.(This is actual ratio for camera)
③ WIDE: Full of the screen. Not actual ratio (4:3). Image is expanded according to LCD (WIDE LCD) ratio.
※ How to adjust
① Access to SCREEN MODE with △ /▽ button in UTILITY Menu
② Press SELECT button to enter the menu.
③ Adjust screen ratio value with◁/▷button.
④ To complete the set, press SELECT button.

(3) EXIT : Go back to Setting menu

7-3. INFORMATION (The function to check Model name & Version)
In order to check the product information, press menu button and move to INFORMATION menu with ◁/ ▷ button.
(1) MODEL : You can check the model name.
(2) VERSION : You can check the model version.
(3) SYSTEM : SINGLE (FINE VIEW VIDEOPHONE)
(4) TOUCH : You can check the touch-key version
(5) VIDEO : You can check the video transmission formats(NTSC / PAL)
(6) SOURCE : You can check the position of camera(DOOR) which is shown on the screen for now.

7-4. EXIT(Finish setting menu)

8. Installation

▷ Monitor installation

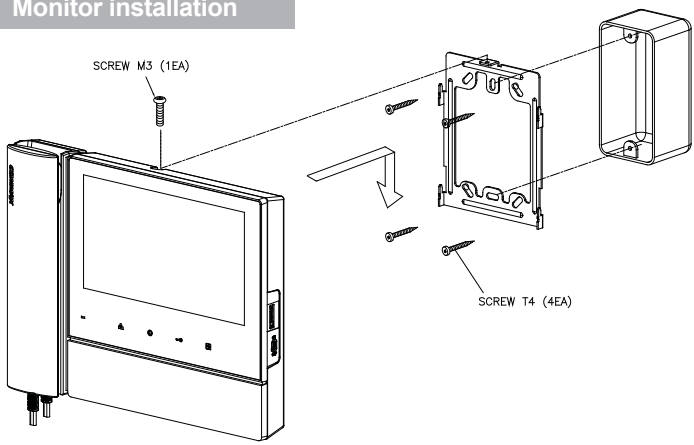

✳ Note

- Avoid installing the product in the area of direct sunlight.
- The position of the unit's body should fit the standard height range (Recommended height range is 1450 ~ 1500mm.)
- Avoid installing the product exposed to gas exposure, magnetic force, in humid temperatures, as it may damage the condition and performance of the product.

▷ Camera Installation (at DRC-4L)

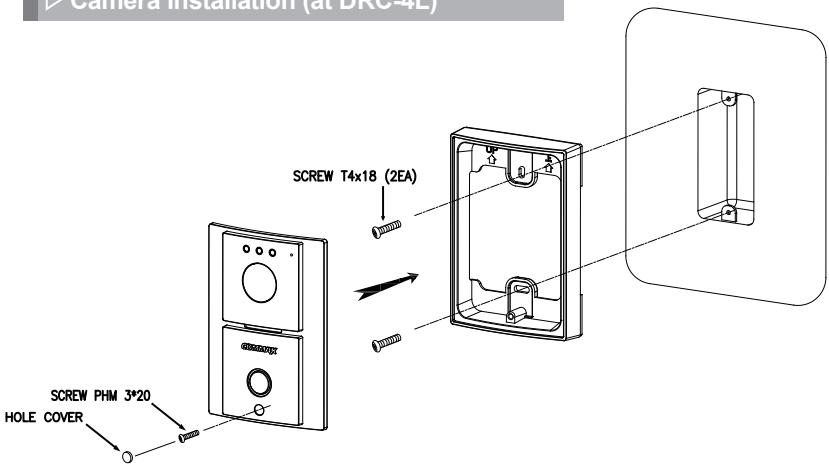

✳ Note

- Do not install a door camera in the area exposed to direct sunlight or backlight.
- Please keep the lens clean for the clearest image reflection.

9. Specifications and Features

CDV-70N / CDV-70ND

Power source	CDV-70N : 100-240V~, 50/60Hz(FREE VOLTAGE)	
	CDV-70ND : 24V ⎓ , 1A	
Power Consumption	Standby : 3W, Operating : 16W	
Wiring	4 wires with door camera (Polarity), 4 wires with an Interphone (Polarity)	
Screen Size	Color 7" TFT LCD	
Communication	Simultaneous communication	
Call Sound	From a door camera : Electric chime From an interphone : Beep sound	
Time to display the screen	60 ± 10sec	
Distance from camera	28m(Φ 0.5) / 50m(Φ 0.65) / 70m(Φ 0.8)	
Operating Temperature	0 ~ +40℃ (32°F ~ 104°F)	
Warranty Period	1 year	
Environment Condition	Storage Temperature	-40 °C to 50 °C
	Storage Humidity	Less than 90 %
Product Life-Cycle	10 years	

Reference : Design and functions of the product are a subject of constant development as a pursuit of quality improvement

10. Safe Operation guide

- Make sure to turn on the product
- In case if physical damage or operation failure is detected, do not hesitate to contact Service Center
- All electric power must be blocked by the building blocking device
- Do not place water bottles or flowerpots upon the product
- Please, turn the power off when installing or repairing the product
- This apparatus shall not be exposed to dripping or splashing and that no objects filled with liquids, such as vases, shall be placed on the apparatus.
- Plug as disconnection device shall remain to be readily approached by user.

COMMAX Co.,Ltd.

513-11, Sangdaewon-dong, Jungwon-gu, Seongnam-si, Gyeonggi-do, Korea
Int'l Business Dept. Tel. : +82-31-7393-540~550 Fax. : +82-31-745-2133
Web site : www.commax.com

PM0770ND00010

Printed In Korea / 2016.06.104