COMPANICS
Communication & Electronics LTD

כומפניקס תקשורת ואלקטרוניקה בע"מ
הבורסקאי 1 א.ת. סגולה, פ"ת | ספק מ. הביטחון: 83524121 | ח.פ: 512109968
03-9049004 טל' / | www.companics.co.il | sales@companics.co.il

Model Number 18109R
Usb C to HDMI Adapter

Features:



לצפייה באתר לחץ כאן

- 4K@60Hz Ultra High Definition: Offering 4K resolutions up to 3840x2160@ 60Hz. Including 3D and multiple view video, Full HD, 1080p, HDR.
- Universal Compatibility: Compatible with MacBook Pro 16'' 2019/2018/2017, iPad Pro 2019/2018, iMac 2018/2017, MacBook 2019/2018/2017/2016/2015, Surface Book 2, Samsung Galaxy S20/S10/S9/S8/Note 9/Note 8, Pixelbook, Dell XPS 15 /XPS 13, Galaxy Book, Chromebook, Chromebook Pixel, and many others.
- Durability and Stability: Made of 32AWG Tinned copper with triple-layer shielding to resist interference and ensure stable signal transmission. Durable and thickening Aluminum shell and Gold-plated connectors to ensure a superior durability and functionality under heavy usage.
- With ring: With moveable ring on the cable which can be wired by wire, easy for collection.
- LED Light Indication: The blue LED light will light up when connected to indicate that the product is working.

Specifications:

Item	Usb C to HDMI Adapter
Model	**18109R**
Input	Type-C Male Gold-Plated
Output	HDMI Female Gold-Plated
Wire	34AWG(7/0.06TC*1P+EAM)*4C+34AWG(7/0.06TC)*1P+34AWG(7/0.06TC)*4C+26AWG
Shielding	Aluminum Foil
Braided	Al+Mg Wire
Jacket	TPE
Shell	Aluminum
OD	4.2mm

Wire:

ELECTRICAL TEST:
A. OPEN/SHORT/INTERMITTENCE: 100%
B. HI-POT: 300V/DC, 0.01S
C. CONCACT RESISTANCE: 3Ω
D. INSULATION RESISTANCE: 10M OHM(MIN)
E. RESOLUTION: 4K@60Hz

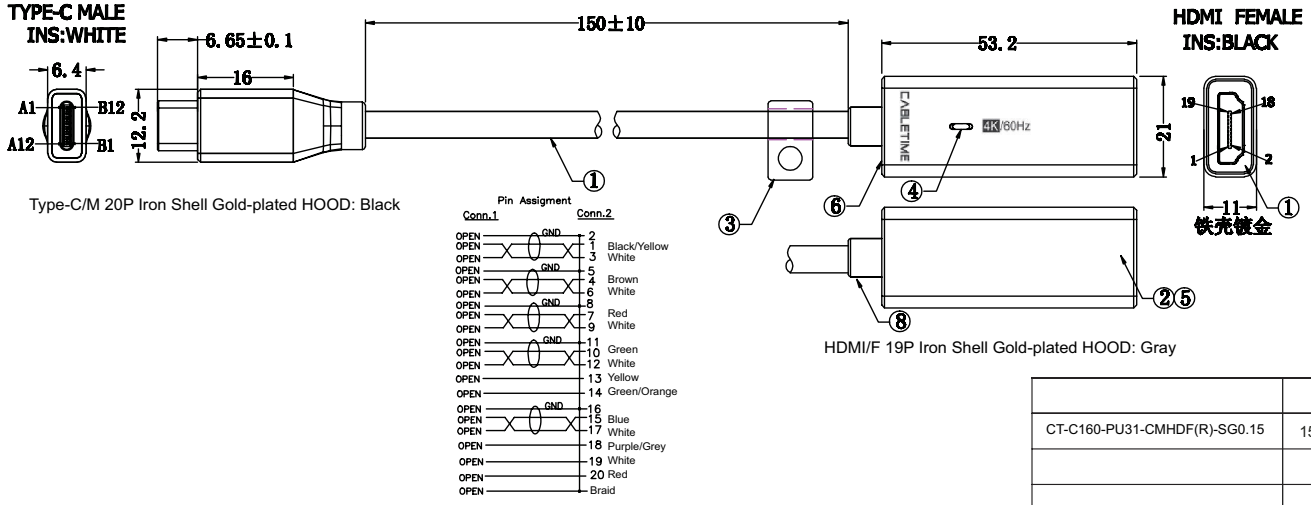

CT-C160-PU31-CMHDF(R)-SG0.15	150±10mm

8	DP Shell	Type-C/M Aluminum Shell/Space Grey/Size: L17*W4*2.7mm
7	Insulation	HDMI/F Black ABS Shell(front): L19.7*W9.7*6.8mm
6	SR	HDMI/F Black ABS Shell(back): L19.7*W9.7*6.8mm
5	HDMI Shell	HDMI/F Aluminum Shell/Space Grey/Size: L53.2*W21*11mm
4	Light	Blue LED Light Indication
3	Wire Ring	OD:4.4mm/Black TPE
2	PCBA	KDK-027 4K60Hz TYPE-C/M TO HDMI/F V1.0
1	Wire	34AWG(7/0.06TC*1P+EAM)*4C+34AWG(7/0.06TC)*1P+34AWG(7/0.06TC)*4C+26AWG (7/0.16TC)*2C+A+B/Tinned copper Braided/ Black Matte TPE/OD:4.2mm
No.		DESCRIPTION

Item Number	CT-C160-PU31-CMHDF(R)-SG0.15			Drawer	Li Chen
Description	Type-C/M to HDMI/F 4K@60Hz			Checked	Fuhai Chen
Material		Scale	1:1	Approved	Frank Su
	A	Unit	MM		
Cufomer No:					
Remark	ROHS Compliant				

1. Through the rope with the adapter

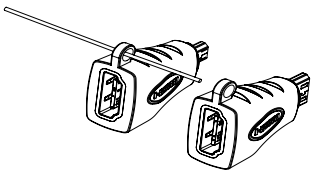

2. Through the rope with the aluminium head and press it by pliers

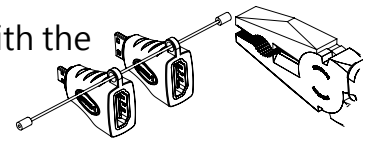

3. Fix the clamp on the table by screw(we also provide velcro as alternative)

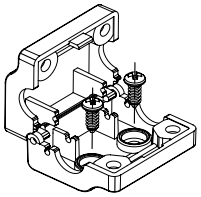

4. Put the rope in the slot inside the clamp

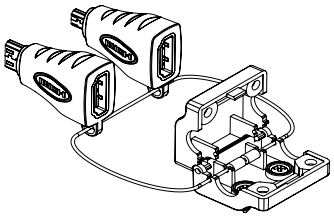

5. Close the cover, and fix the clamp by screws and nuts

